SPACE-RAY
INFRARED GAS HEATERS

INSTALLATION AND OPERATION INSTRUCTIONS

OWNER / INSTALLER: For your safety this manual must be carefully and thoroughly read and understood before installing, operating or servicing this heater.

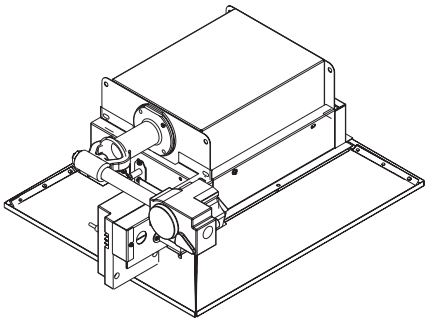

INFRARED RADIANT CERAMIC HEATER

Models: RSCA3, RSCA6, RSCA10

UNVENTED (For Indoor Installation Only)

!INSTALLER: This manual is the property of the owner. Please present this manual to the owner when you leave the job site.

▲WARNING: Improper installation, adjustment, alteration, service, or maintenance can cause property damage, injury or death. Read the installation, operation and maintenance instructions thoroughly before installing or servicing this equipment.

In locations used for the storage of combustible materials, signs must be posted to specify the maximum permissible stacking height to maintain the required clearances from the heater to the combustibles. Signs must either be posted adjacent to the heater thermostats or in the absence of such thermostats, in a conspicuous location.

!IMPORTANT: SAVE THIS MANUAL FOR FUTURE REFERENCE.

SPACE-RAY
Post Office Box 36485 *(28236)* · 305 Doggett Street *(28203)* · Charlotte, North Carolina
Phone (704) 372-6391 · Fax (704) 332-5843 · www.spaceray.com · email: info@spaceray.com

Form #43219000
Jan 09

! WHAT TO DO IF YOU SMELL GAS:

- ! DO NOT try to light any appliance. Extinguish any open flame. Open windows.
- ! DO NOT touch any electrical switch. DO NOT use any telephone in your building.
- ! Immediately call your gas supplier from a neighbor's telephone. Follow the gas supplier's instructions.
- ! If you cannot reach your gas supplier, call the Fire Department.

▲WARNING: NOT FOR RESIDENTIAL USE.

This heater is not approved in any residential application. This includes (but is not limited to) the home, living quarters, attached garages, etc. Installation in residential indoor spaces may result in property damage, asphyxiation, and serious injury or death.

▲WARNING:

- ♦ Installation and service must be performed by a qualified installer, service agency or the gas supplier.
- ♦ If the information in these instructions is not followed exactly, a fire or explosion may result causing property damage, personal injury or death.
- ♦ DO NOT store or use gasoline or other flammable vapors and liquids in the vicinity of this or any other appliance.

TABLE OF CONTENTS

SECTION	DESCRIPTION	PAGE	SECTION	DESCRIPTION	PAGE
1)	Safety	2	10)	Instructions for Pressure Test Gauge Connection	9
2)	Installer Responsibility	2	11)	Electrical Connections	10
3)	General Information	2	12)	Ventilation	11
4)	Minimum Clearances To Combustibles	4	13)	Lighting and Shutdown Instructions	12
5)	RSCA Specifications	5	14)	Sequence of Operation	12
6)	RSCA Dimensions	6	15)	Cleaning and Annual Maintenance	13
7)	Hanging	6	16)	Replacing Parts	13
8)	Optional Parabolic Reflector Extension Assembly	7	17)	Installation Data	13
9)	Gas Connections and Regulation	7	18)	Replacement Parts Guide	14

This heater complies with ANSI Z83.19 (current standard) and CSA 2.35. Copies of the National Fuel Gas Code (ANSI Z223.1-latest edition) are available from the CSA at 8501 East Pleasant Valley Road, Cleveland, Ohio 44131 or 55 Scarsdale Road, Don Mills, Ontario M3B 2R3. All NFPA codes are available from the National Fire Protection Association, Batterymarch Park, Quincy, Massachusetts 02269.

1) SAFETY

This heater is a self-contained infrared radiant ceramic heater. Safety information required during installation and operation of this heater is provided in this manual and the labels on the product. The installation, service and maintenance of this heater must be performed by a contractor qualified in the installation and service of gas fired heating equipment.

All personnel in contact with the heater must read and understand all safety information, instructions and labels before operation. The following symbols will be used in this manual to indicate important safety information.

⚠ WARNING **Warning** instructions must be followed to prevent or avoid hazards which may cause serious injury, property damage or death.

⚠ CAUTION **Caution** instructions must be followed to prevent incorrect operation or installation of the heater which may cause minor injury or property damage.

2) INSTALLER RESPONSIBILITY

The installer is responsible for the following:

- The heater installation, electrical and gas supplies must be installed in accordance with these installation instructions and any applicable codes and regulations.
- Every heater shall be located with respect to building construction and other equipment so as to permit access to the heater.
- Each installer must follow the clearances to combustible materials for the heaters.
- Install the heater so that the supports and hangers are correctly spaced in accordance with these instructions. The heater must be supported by materials having a working load limit of at least 87lbs.
- Supply the owner with a copy of these Installation and Operation Instructions.
- Gravity or mechanical means shall be provided to supply and exhaust at least 4 CFM per 1,000 Btu/hr input of installed heaters.
- Never use the heater as a support for a ladder or other access equipment. Do not hang anything from the heater.
- Supply all installation materials necessary that are not included with the heater.
- Check the nameplate to make sure that the burner is correct for the gas type in the building.

3) GENERAL INFORMATION

This heater is a self-contained infrared radiant ceramic heater for use in locations where flammable gases or vapors are not generally present (as defined by OSHA acceptable limits) and is intended for space heating **non-residential spaces.**

SAFETY REQUIREMENTS

! The heater area must be kept clear and free from combustible materials, gasoline and other flammable vapors and liquids.
! This heater is designed for use with one type of gas (LPG or Natural). Make sure that the type of gas to be supplied to this heater matches that shown on the heater rating plate.
! **DO NOT** install this heater directly onto an LPG container or propane cylinder without directions from your propane company. LPG containers (propane cylinders) must not be stored indoors or in the vicinity of any gas-burning appliance.
! Children and adults should be alerted to the hazards of high surface temperatures and should stay away to avoid burns or clothing ignition.
! Clothing or other flammable materials should not be hung from the heater or placed on or near the heater.
! Young children should be carefully supervised when they are in the same space as the heater.

! **NEVER** attempt to service the heater while it is plugged in, operating or hot. Any guard or other protective device removed for servicing a heater must be replaced prior to operating the heater.
! Installation and repair should be done by a qualified service person. The heater should be inspected before use and at least annually by a qualified service person. More frequent cleaning may be required as necessary. It is imperative that the control compartment, air passageways and burner of the heater be kept clean.

INSTALLATION REQUIREMENTS

The installation must conform to local building codes or, in the absence of local codes, with the National Fuel Gas Code ANSI Z223.1/NFPA54 or the Natural Gas and Propane Installation Code CSA B149.1. Heaters shall be installed by a licensed contractor or licensed installer. **Clearances to combustibles as outlined in this manual should always be observed. In areas used for storage of combustible materials where they may be stacked below the heater, NFPA54 requires that the installer must post signs that will "specify the maximum permissible stacking height to maintain the required clearances from the heater to combustibles."**

Every heater shall be located with respect to building construction and other equipment so as to permit access to the heater. Each installer shall use quality installation practices when locating the heater and must give consideration to clearances to combustible materials, vehicles parked below, lights, overhead doors, storage areas with stacked materials, sprinkler heads, gas and electrical lines, and any other possible obstructions or hazards. Consideration also must be given to service accessibility.

The heater, when installed in aircraft hangars and public garages, must be installed in accordance with ANSI/NFPA 409-latest edition (Standard for Aircraft Hangars), ANSI/NFPA 88a-latest edition (Standard for Parking Structures), and ANSI/NFPA 88b-latest edition (Standard for Repair Garages) with the following clearances:

a. At least 10 feet above the upper surfaces of wings or engine enclosures of the highest aircraft that may be housed in the hangar and at least 8 feet above the floor in shops, offices, and other sections of hangars communicating with aircraft storage or service areas.
b. At least 8 feet above the floor in public garages. ▲**WARNING:** Minimum clearances marked on the heater must be maintained from vehicles parked below the heater.

(FOR CANADA ONLY)

a. Installation of this appliance is to be in accordance with latest edition of CSA B149.1 (the Natural Gas and Propane Installation Code).

b. For installation in public garages or aircraft hangars, the minimum clearances from the bottom of the infrared heater to the upper surface of the highest aircraft or vehicle shall be 50 percent greater than the certified minimum clearance, but the clearance shall not be less than 8 feet.

Although these heaters may be used in many applications other than space heating (e.g., process heating), **SPACE-RAY** will not recognize the warranty for any use other than space heating.

This heater is for Indoor Installation only and can be used in Unvented mode. The term Unvented actually means Indirect Vented. While the products of combustion are expelled into the building, national codes require ventilation in the building to dilute these products of combustion. This ventilation may be provided by gravity or mechanical means.

This heater is not an explosion proof heater. Where the possibility of exposure to volatile and low flash point materials exists, it could result in property damage or death. This heater must not be installed in a spray booth where the heater can operate during the spraying process. Consult your local fire marshal or insurance company.

▲**WARNING:** Certain materials or objects, when stored under the heater will be subjected to radiant heat and could be seriously damaged. Observe the **MINIMUM CLEARANCES TO COMBUSTIBLES** listed in this manual and on the heater at all times.

4) MINIMUM CLEARANCES TO COMBUSTIBLES

⚠ WARNING

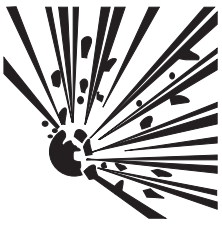

FIRE AND EXPLOSION HAZARD

Combustible material must be located outside the clearance dimensions listed.

Failure to do so may result in death, serious injury or property damage.

⚠ WARNING

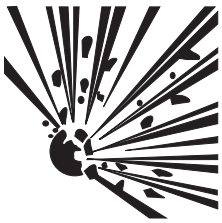

FIRE AND EXPLOSION HAZARD

Always maintain minimum clearances and post signs where needed. Signs should state the hazards for the particular application and be legible to the building occupants. Consult the factory or a factory representative for additional information on signage compliance.

Failure to do so may result in fire and/or explosion, property damage, serious injury or death.

When installing the infra-red heater system, the minimum clearances to combustibles must be maintained. These distances are shown in Chart below and on the heater. If you are unsure of the potential hazards, consult your local fire marshal, fire insurance carrier or other qualified authorities on the installation of gas fired infra-red heaters for approval of the proposed installation.

Minimum clearances shall be measured for the outer surfaces as shown below:

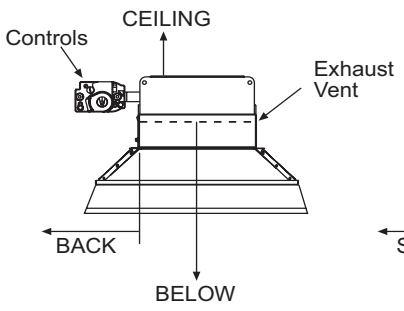

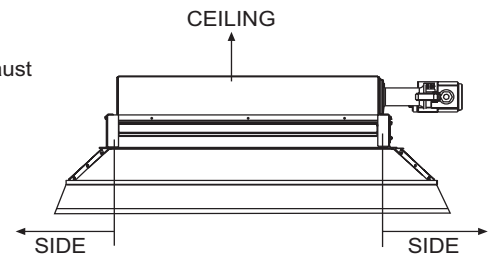

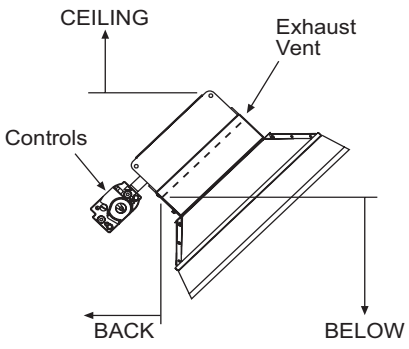

MOUNTED HORIZONTALLY								
	BACK		SIDES		CEILING		BELOW	
MODEL	BACK	BACK w/Reflector Extension	SIDES	SIDES w/Reflector Extension	CEILING	CEILING w/Reflector Extension	BELOW	BELOW w/Reflector Extension
RSCA3	24"	36"	24"	36"	24"	36"	48"	126"
RSCA6	36"	36"	30"	36"	36"	36"	72"	126"
RSCA10	45"	48"	48"	60"	36"	36"	96"	168"

MOUNTED at 45° ANGLE								
	BACK		SIDES		CEILING		BELOW	
MODEL	BACK	BACK w/Reflector Extension	SIDES	SIDES w/Reflector Extension	CEILING	CEILING w/Reflector Extension	BELOW	BELOW w/Reflector Extension
RSCA3	8"	12"	24"	36"	32"	36"	48"	126"
RSCA6	12"	12"	30"	36"	36"	36"	72"	126"
RSCA10	18"	12"	48"	60"	36"	36"	96"	168"

IMPORTANT: The clearances specified above must be maintained to combustibles and other materials that may be damaged by temperatures 90°F above ambient temperature. It is the installer's responsibility to ensure that building materials with a low heat tolerance which may degrade at lower temperatures are protected to prevent degradation. Clearances to combustibles are posted on the reflector near the control end of the heater. In areas used for storage of combustible materials where they may be stacked below the heater, NFPA54 requires that the installer must post signs that will "specify the maximum permissible stacking height to maintain the required clearances from the heater to combustibles." Space-Ray recommends posting these signs adjacent to the heater thermostat or other suitable location that will provide enhanced visibility.

5) RSCA SPECIFICATIONS

MODEL	GAS TYPE	INPUT BTU/HR	MINIMUM MOUNTING HEIGHT	ORIFICE SIZE	SHIPPING WEIGHT
RSCA3-N1	Natural	26,000	12 ft.	#42 (0.0935)	30 lbs.
RSCA3-L1	Propane	26,000	12 ft.	#53 (0.0595)	30 lbs.
RSCA6-N1A	Natural	52,000	14 ft.	#32 (0.1160)	40 lbs.
RSCA6-L1	Propane	52,000	14 ft.	#45 (0.0820)	40 lbs.
RSCA3-N5	Natural	26,000	12 ft.	#42 (0.0935)	30 lbs.
RSCA3-L5	Propane	26,000	12 ft.	#53 (0.0595)	30 lbs.
RSCA6-N5A	Natural	52,000	14 ft.	#32 (0.1160)	40 lbs.
RSCA6-L5	Propane	52,000	14 ft.	#45 (0.0820)	40 lbs.
RSCA10-N5A	Natural	104,000	15 ft.	#32 (0.1160)	70 lbs.
RSCA10-L5	Propane	104,000	15 ft.	#45 (0.0820)	70 lbs.

MODEL SUFFIX:	
Gas Type:	Ignition System:
N = Natural L = Propane	1 = Standing Pilot (Millivolt) 5 = Direct Spark (120V/.40A/60Hz)

REFLECTOR TYPE:	GAS-PIPE CONNECTION:
Standard or Optional Parabolic Reflector Extension	1/2" NPT (Female)

***MOUNT HEATERS AS HIGH AS POSSIBLE**. Minimums are shown as a guideline for human comfort and uniform energy distribution for complete building heating applications. Consult your **Space-Ray** representative for the particulars of your installation requirements.

6) RSCA DIMENSIONS

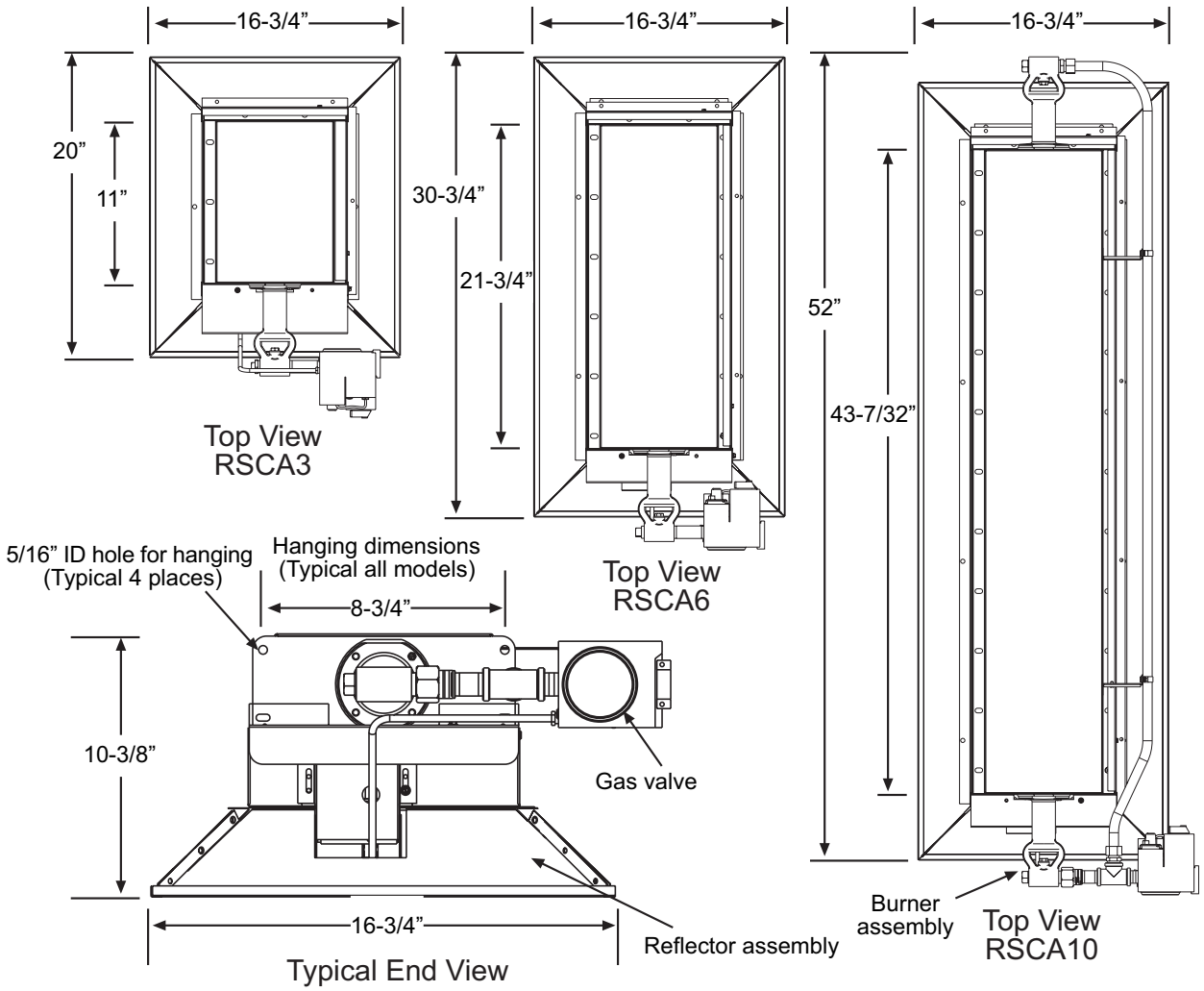

7) HANGING

⚠ WARNING

SUSPENSION HAZARD

Always suspend from a permanent part of the building structure that can support the total force and weight of the heater.

Never use the heater to support a ladder or other access equipment.

Improper suspension of the infrared heater may result in collapse and being crushed.

Failure to do so may result in death, serious injury or property damage.

The heater can be mounted with the reflector horizontal or angled up to 35° from horizontal. When the heater is to be angle mounted, make sure the gas manifold assembly is on the lower side of the heater. Coil chains (No. 2 or larger) or rigid supports may be used to mount the heater, which must be suspended from a permanent structure with adequate load capacity. The gas manifold assembly tube must be level, and for angled mounting, it must be at the LOWER end of the heater. All “S” hooks and eyebolts must be manually crimped closed by the installer.

8) OPTIONAL PARABOLIC REFLECTOR EXTENSION ASSEMBLY

The heater is completely factory assembled and requires no field assembly. If the optional parabolic reflector extension is utilized, locate and identify the end panels and side panels as shown in the following diagram. Attach the side panels as shown. Attach the end panels so that the end flanges of the end panels overlap the side panels. Attach the side panels and end panels together with the screws provided in the kit. Attach the remaining screws as shown in Detail A. This is to ensure that the Parabolic Reflector Extension is securely attached to the reflector. The clearances to combustibles (shown on the clearance label that is secured to the reflector on the control end of the heater and in Section 4 of these instructions) must be closely observed.

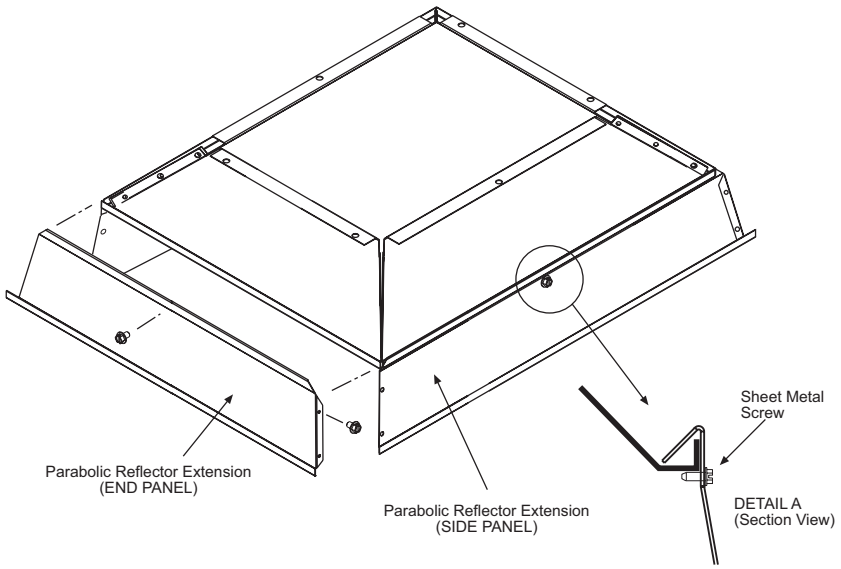

9) GAS CONNECTIONS AND REGULATION

⚠ WARNING

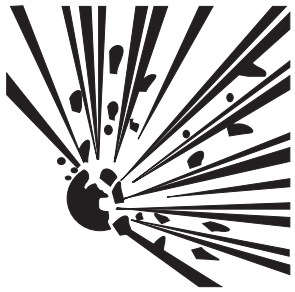

FIRE AND EXPLOSION HAZARD

An approved connector, suitable for the environment of equipment usage, is required. Visible or excessive swaying, flexing and vibration of the gas connections **must** be avoided to prevent failure. Neither the gas pipe nor the connector shall be placed in the “flue discharge area”. In no case shall the gas supply support the weight of the heater.

Failure to do so may result in death, serious injury or property damage.

⚠ WARNING

FIRE AND EXPLOSION HAZARD

Tighten flexible gas hose and components securely.

Improperly connected gas lines may result in fire, explosion, poisonous fumes, toxic gases, asphyxiation or death. Connect gas lines in accordance to national, state, provincial and local codes.

Failure to do so may result in death, serious injury or property damage.

1. Connect to the supply tank or manifold in accordance with the latest edition of National Fuel Gas Code (ANSI Z223.1), and local building codes. Authorities having jurisdiction should be consulted before the installation is made. (In Canada, refer to the latest edition of CSA B.149.1 the Natural Gas and Propane Installation Code.)
2. All gas supply lines must be located in accordance with the required clearances to combustibles below the heater as listed on the nameplate of the heater.
3. Pipe joint compounds must be resistant to the action of liquefied petroleum gases.
4. Where local codes do not prohibit, a CSA or U.L. approved flexible connector (minimum 5/8" I.D.) is recommended between the rigid piping and the heater. A union and an approved shut off valve should be installed before the control valve inlet. The shut off valve should be installed within 6 feet of the union.
5. This appliance is equipped with a snap-opening, combination gas valve. The maximum supply pressure to the appliance is 14" W.C. or 1/2 P.S.I. If the line pressure is more than the maximum supply pressure, then a second stage regulator which corresponds to the supply pressure must be used.
6. If a second stage regulator is used and gas seeps through it, the redundant combination gas valve is designed to lock out. Pressure build-up in the supply lines prior to the heater must be released before proper heater operation.
7. After all gas connections have been made, make sure the heater and all gas outlets are turned off before the main gas supply is turned on. Turn the gas pressure on and check for leaks. To check for leaks, apply a soapsuds solution to all connections and joints or check by one of the methods listed in Appendix D of the National Fuel Gas Code.

⚠ WARNING **Do not use an open flame of any kind to test for leaks.**

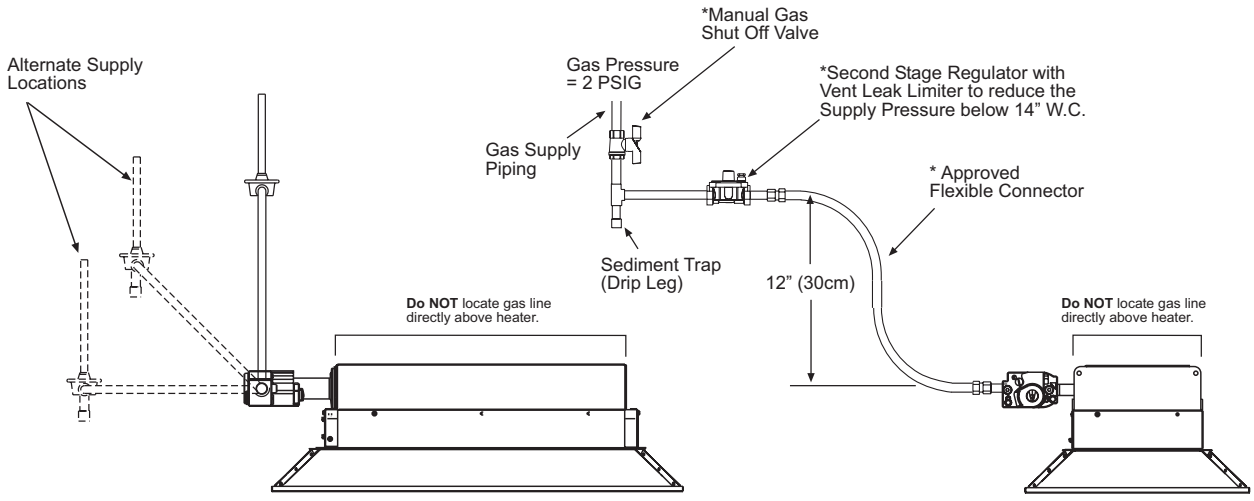

* Available as Accessories

Certified connectors are recommended to be installed as shown, in one plane, and without sharp bends, kinks or twists. The gas take off from the drop line must be parallel to the burner gas inlet connection.

If the maximum supply pressure is less than ½ psig, a second stage regulator is not required.

10) INSTRUCTIONS FOR PRESSURE TEST GAUGE CONNECTION

Supply Pressure

1. The installer will provide a 1/8" N.P.T. plugged tapping, accessible for test gauge connection immediately upstream of the gas supply connection to the heater.

Manifold Pressure

1. Turn the gas valve to the **"OFF"** position. Remove the 1/8" plug from the manifold downstream from the combination gas valve at one of the outlet pressure taps and connect a 1/8" nipple to the tapped hole. Connect the gauge to the nipple. Turn on the gas supply.
2. With the main burner operating, check the burner manifold pressure using a water manometer. Gauges that measure pressure in pounds per square inch are not accurate enough to measure or set the manifold pressure. All measurements **MUST BE** made when this heater and all other gas burning equipment that is connected to the gas supply system are operating at maximum capacity.
3. The combination gas valve is factory set and should not require adjustment. If full rate adjustment is required, remove the cover screw. Using a small screwdriver, turn the adjustment screw clockwise ↻ to increase or counterclockwise ↺ to decrease the gas pressure to the burner. Replace the cover screw.

The gas pressures are shown in the following table:

GAS PRESSURE TABLE

Model	Gas Type	Manifold Pressure	Supply Pressure	
			MinimumW	***Maximum***
RSCA3	Natural Gas	3.5" W.C.	4.5" W.C.	14.0" W.C.
	Propane Gas	10.0" W.C.	11.0" W.C.	14.0" W.C.
RSCA6 and RSCA10	Natural Gas	6.0" W.C.	7.0" W.C.	14.0" W.C.
	Propane Gas	10.0" W.C.	11.0" W.C.	14.0" W.C.

W Minimum permissible gas supply pressure for purpose of input adjustment.

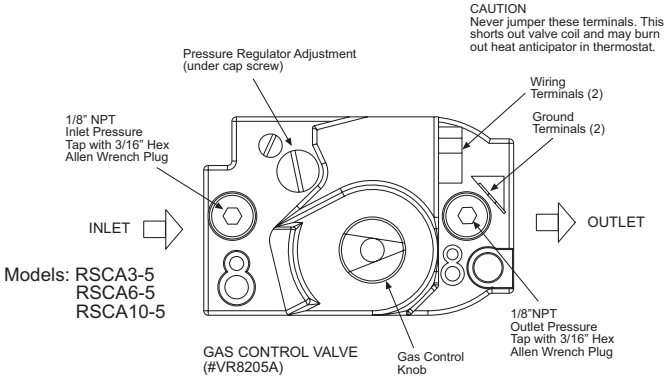

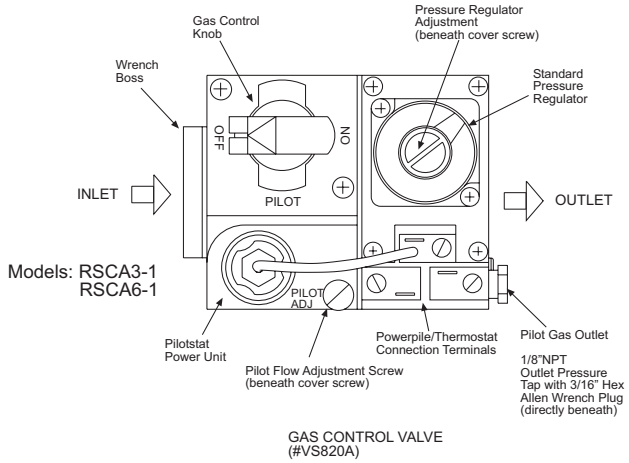

11) ELECTRICAL CONNECTIONS

⚠ WARNING

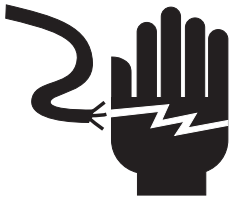

ELECTRIC SHOCK HAZARD

Disconnect electrical power and gas supply before servicing.

This appliance must be connected to a properly grounded electrical source.

Failure to do so may result in death or serious injury.

1. All electric wiring shall conform to the latest edition of the National Electrical Code (ANSI/NFPA No. 70), or the code legally authorized in the locality where the installation is made.
2. The unit must be electrically grounded in accordance with the National Electrical Code (ANSI/NFPA No. 70-latest edition). In Canada, refer to current standard C22.1 Canadian Electrical Code Part 1.
3. The wiring providing power to the heater shall be connected to a permanently live electrical circuit, o ne that is not controlled by a light switch.
4. The power supply to the unit should be protected with a fused disconnect switch or circuit breaker. A service switch, as required by local codes, shall be located in the vicinity of the heater (check local codes for allowable distances) and should be identified as Heater Service Switch. All electrical wiring must be located in accordance with the required Clearances to Combustibles below the heater as listed on the nameplate on the heater.
5. When connecting the supply circuit to the heater, wiring material having a minimum size of 14 AWG and a temperature rating of at least 90ºC shall be used.

TYPICAL HEATER WIRING DIAGRAM FOR DIRECT SPARK IGNITION SYSTEM

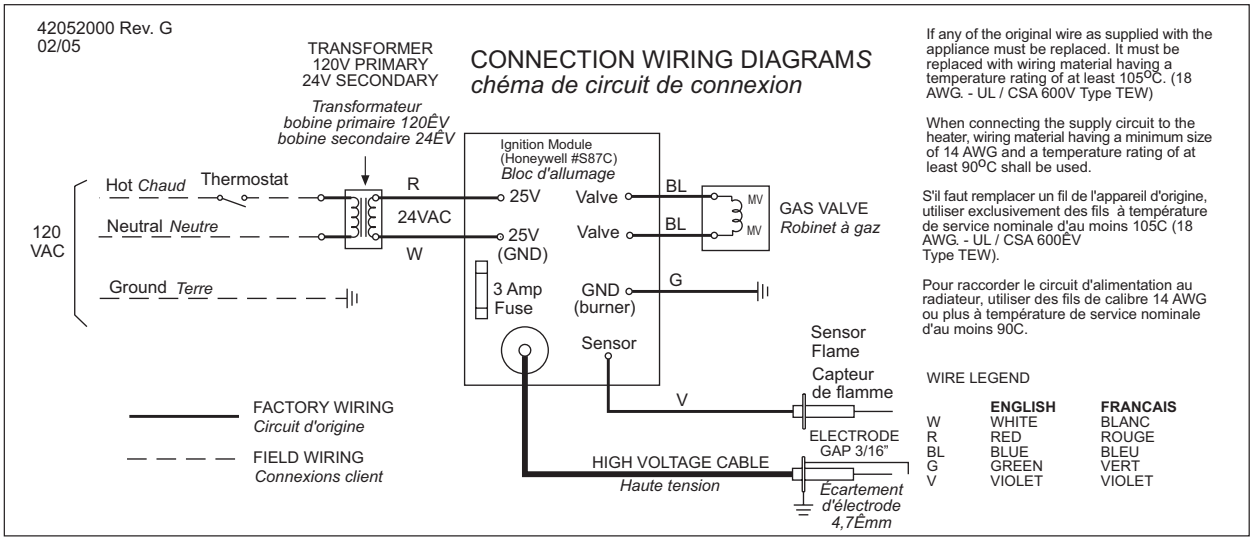

TYPICAL THERMOSTAT WIRING INSTALLATIONS FOR DIRECT SPARK IGNITION SYSTEM

Model No. Suffix: N5, L5
120 Volt Direct Spark Ignition
(Single Heater Per Thermostat)

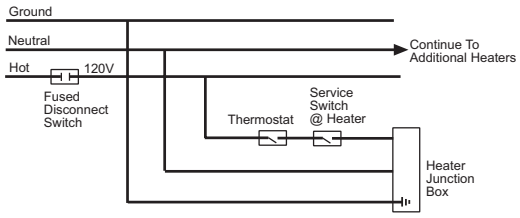

Model No. Suffix: N5, L5
120 Volt Direct Spark Ignition
(Multiple Heaters Per Thermostat)

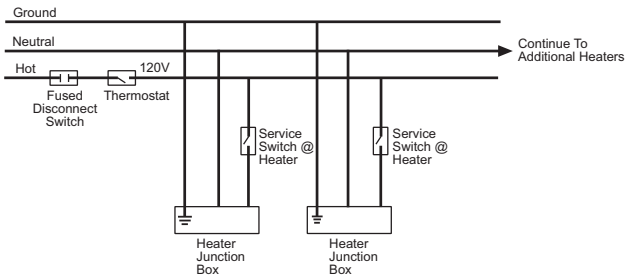

TYPICAL THERMOSTAT WIRING INSTALLATIONS FOR STANDING PILOT IGNITION SYSTEM

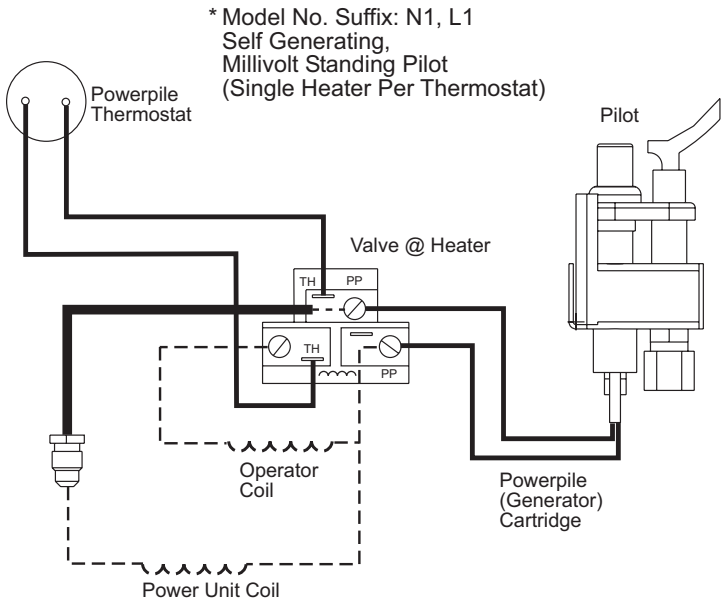

* CAUTION: A millivolt type thermostat is required for use on self-generating pilot model heaters N1 & L1.

12) VENTILATION

⚠ WARNING

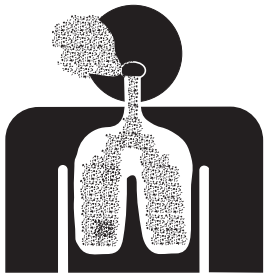

CARBON MONOXIDE HAZARD

Heaters installed in an unvented mode require a minimum ventilation flow of 4 CFM per 1,000 Btu/hr of total installed capacity.

Failure to do so may result in death, serious injury, property damage or illness from Carbon Monoxide poisoning.

Where unvented infrared heaters are used, natural or mechanical means shall be provided to supply and exhaust at least 4 cfm per 1000 Btu per hr input of installed heaters.

Exhaust openings for removing flue products shall be above the level of the heaters.

This heater requires ventilation in the building to dilute the product of combustion and provide fresh air for efficient combustion. Power ventilation is recommended, and the minimum vent flow required is as follows:

RSCA3 = 109 cfm RSCA6 = 218 cfm RSCA10 = 436 cfm

If gravity ventilation is used, the required square feet of inlet and outlet vent area (depending on height and temperature difference) is as follows:

RSCA3 = 0.4 s/f RSCA6 = 0.8 s/f RSCA10 = 1.6 s/f

The General Ventilation Rules outlined in ASHRAE GUIDE AND DATA BOOK should be observed when locating vents. Exhaust vents must be located at the highest point above and in the vicinity of the heaters and the inlet vents must be located below the level of the heaters. Local codes may require that mechanical exhaust systems be interlocked with the function simultaneously or allow control of exhausters to humidistat.

13) LIGHTING AND SHUTDOWN INSTRUCTIONS

⚠ WARNING

ELECTRIC SHOCK AND FIRE HAZARD

Disconnect power to heater before servicing.

Do not operate unit if repairs are necessary. Do not operate unit showing any signs of burner malfunction. Call a professional for assistance.

Failure to do so may result in death, serious injury or property damage.

STANDING PILOT IGNITION SYSTEM (Ignition Suffix "1")

1) Turn the dial to **"PILOT."** Press the dial in and light the pilot. Hold for **60 seconds** and release.
2) Turn the dial counterclockwise ↺ to **"ON."** Use this position for thermostat control. Set the thermostat for desired room temperature.
3) If the heater does not light, shut off the gas completely for **5 minutes** before attempting to relight.
4) To shut down the heater, turn the dial clockwise ↻ to **"PILOT."** Depress the dial slightly and turn to **"OFF."**

DIRECT SPARK IGNITION SYSTEM (Ignition Suffix "5")

1) Turn on gas supply.
2) Set thermostat to call for heat.
3) Ignition should occur immediately.
4) If the burner fails to light, or flame is not detected during the trial for ignition (a period of approximately **21 seconds**), the gas valve is de-energized and the control goes into safety lockout. Turn thermostat (or power) off for **60 seconds** to take out of lockout.
5) If heater does not light, shut off gas completely for **5 minutes** before attempting to relight.
6) **CAUTION**: Heater must be grounded. Poor grounding will give nuisance lockouts, particularly during momentary power interruptions.
7) To shut down the heater, turn off the gas and the electrical supply.

NOTE: The lighting and shutdown instructions are also shown on the permanent nameplate attached to the heater.

14) SEQUENCE OF OPERATION

The chart below shows the sequence of operation for the normal operating cycle of the heater equipped with direct spark ignition system when connected to a permanent 120V power supply and the heater is turned on and off by a remote 120V thermostat. (See Section 11)

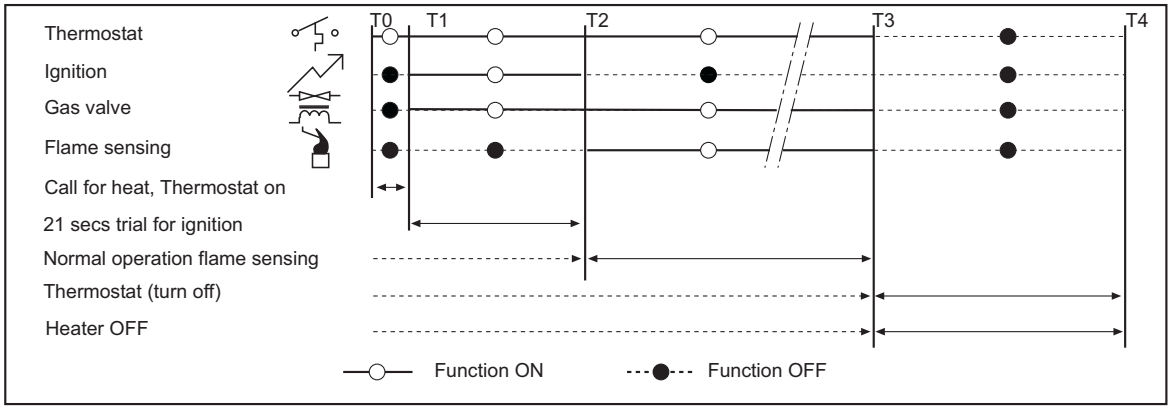

If the flame is not sensed during sequence T2, then the burner will automatically go into safety lockout.

15) CLEANING AND ANNUAL MAINTENANCE

⚠ WARNING

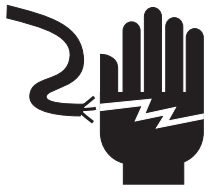

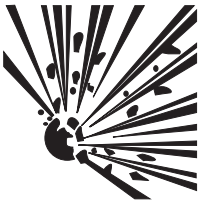

ELECTRIC SHOCK & EXPLOSION HAZARD

Disconnect electrical power and gas supply before servicing.

Failure to do so may result in death or serious injury.

⚠ CAUTION

EQUIPMENT FAILURE HAZARD

Do not blow out heating elements with high pressure air.

Failure to do so may result in property damage.

This heater must be cleaned and serviced at least once before the start of each heating season or at any time the infrared emitter shows signs of collecting any foreign material on its surface or in the ports, or when anything obstructs the venturi or the screen. Maximum heating efficiency and clean combustion will be maintained by keeping the emitter and burner clean. To clean the heater, follow these instructions:

1) Turn off all gas supply to the heater.
2) Clean the reflector.
3) Remove he main burner orifice and the pilot orifice (if so equipped) and clean them thoroughly.
4) Check the venturi opening to be sure it is clean. If there is any evidence of dirt accumulation in the venturi, remove it before cleaning to avoid getting the dirt inside the heater.
5) Inspect the emitter surface to be sure it is clean. Ignite the heater and observe the color of the emitter face. If there are pronounced dark areas on the face, it probably indicated an accumulation of dirt on the inside surface and the following steps must be taken to clean that surface:

DO NOT DIRECT AN AIR HOSE AT THE CERAMIC EMITTER SURFACE AS IT MIGHT DAMAGE THE CERAMIC OR DISLODGE THE HIGH TEMPERATURE GASKET MATERIAL.

   a) Lower the heater to the floor or other suitable working surface.
   b) Remove the reflector from the reflector mounting panels or collar.
   c) Disconnect the electrode cable and flame sensor cable, or pilot burner tubing.
   d) Remove the reflector mounting panels from the heater body
   e) Remove the emitter face from the heater body. This surface unit is attached by ¼" Hex Head machine screws (10 on the **RSCA3**, 16 on the **RSCA6**, and 26 on the **RSCA10**) ◆ **Use caution in this operation as the emitter surface is fragile.**
   f) Carefully brush any foreign material from the back side of the emitter face and the inside of the heater.
   g) The insulation gasket which was between the heater body and the emitter face must be replaced when the heater is reassembled. Order two (2) of each of the part numbers indicated for your particular model:

RSCA3: #40446080 and #40446130
RSCA6: #40446080 and #40446090
RSCA10: #40446080 and #40446110.

16) REPLACING PARTS

Ensure that at all times when parts are being replaced, both gas and electrical supplies are disconnected. Various parts are available from the factory for replacement by a licensed person. Refer to the Replacement Parts Guide in Section 18 for all replacement parts.

17) INSTALLATION DATA

Date of Installation: _____ Number of Heaters in System: ____

Heater Serial Number: _____

Heater Model: **RSCA** ____ – ____ (N=Natural Gas, L=Propane Gas)

18) REPLACEMENT PARTS GUIDE

MODELS: RSCA3-(N1, L1)

Item No.	Part No.	Description
1	42129000	Plenum Box Assembly
2	42192000	Emitter Kit (includes items 3 & 4)
3	40446080	End Gasket (Qty. 2)
4	40446130	Side Gasket (Qty. 2)
5	42133000	Screen Retainer (Qty. 2)
6	40670050	Reverb Screen (Pilot)
7	40710020	End Reverb Baffle
8	40621000	End Flue Collar
9	42132000	Side Flue Collar
10	42136000	Venturi Assembly
11	40666000	Venturi Gasket
12	03339080	Plug, 1/2
14	03333100	Nipple, 1/2 x 3"
15	03625420	Main Burner Orifice (#42) Nat. Gas
16	30236530	Main Burner Orifice (#53) LP Gas
17	30299010	Gas Valve @ 3-1/2" WC - VS820A-1039 Nat. Gas
18	30299030	Gas Valve @ 10" WC - VS820A-1120 LP Gas
19	42124000	Reflector Assembly (pilot)
20	40715000	Pilot Housing Assembly
21	40719000	End Flue Collar (pilot end)
22	40707000	Radiation Shield (housing)
23	40649000	Pilot Flue Baffle
24	40750000	Pilot Shield Assembly
25	40706000	Radiation Shield (pilot)
26	42184000	Pilot Tubing
27	03462070	Pilot Generator System - Nat. Gas
28	03462080	Pilot Generator System - LP Gas
29	03463000	Pilot Burner, Less Orifice (included in items #27 & #28)
30	03348020	Pilot Orifice, TJ020 - Nat. Gas (included in item #27)
31	03348030	Pilot Orifice, TJ011 - LP Gas (included in item #28)
32	03378060	Generator Cartridge, PG9 (included in items #27 & #28)
33	43219000	Installation Manual (not shown)
34	42849000	Label – Nameplate
35	42875000	Label – General Warnings
36	43247010	Label – Clearances to Combustibles
37	41250000	Label – Angle Mounting

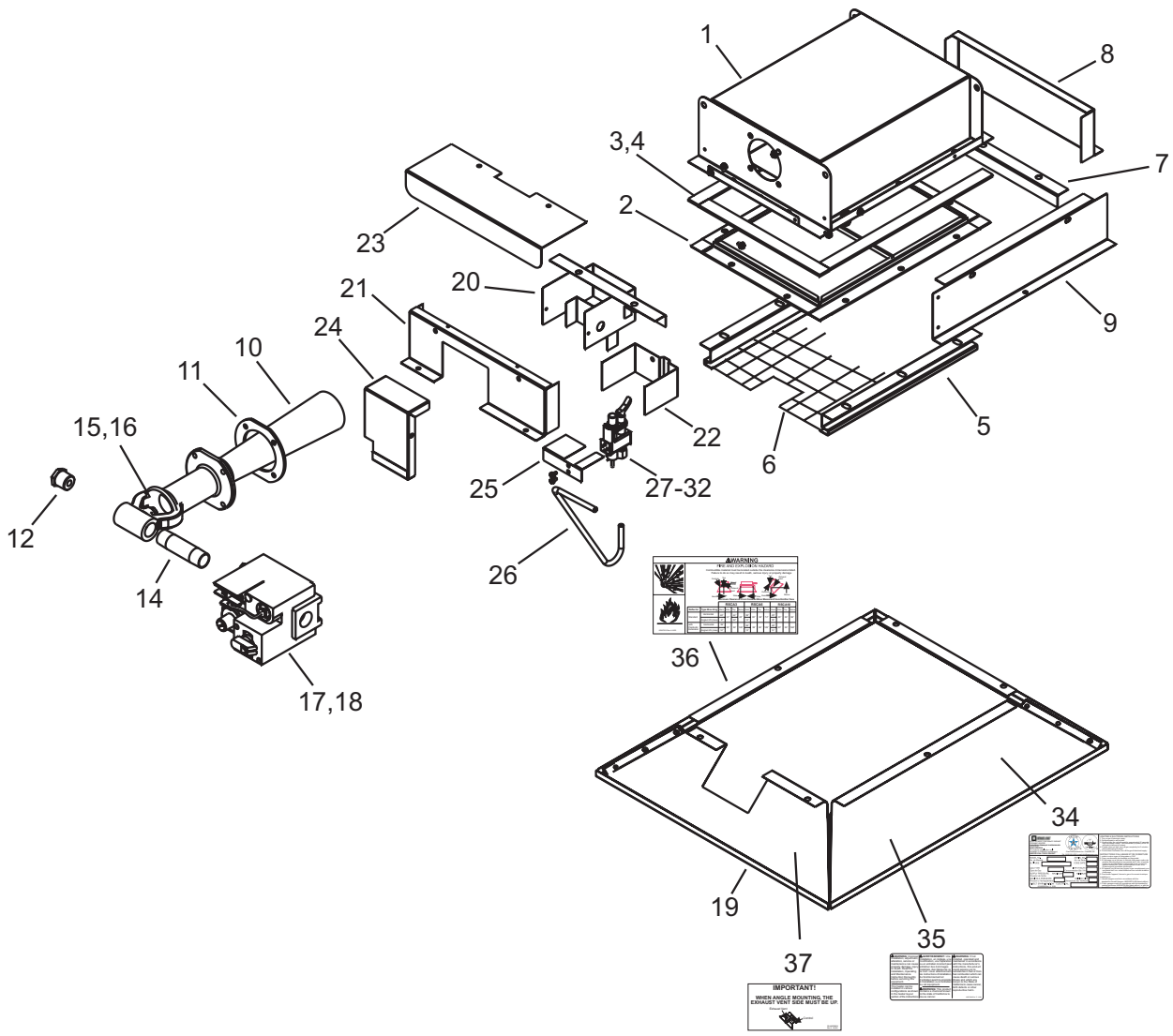

IMPORTANT:

- Please order by Part Number, not by Item Number.
- Refer to complete Model Number when ordering.
- All replacement parts available when ordering.

MODEL NUMBER SUFFIXES:

N = Natural Gas
L = Propane Gas
1 = Self-Generating Standing Pilot
5 = Direct Spark Ignition

ALL ILLUSTRATIONS ARE INTENDED TO GIVE THE GENERAL IMPRESSION OF UNITS ONLY. WE RESERVE THE RIGHT TO ALTER ANY SPECIFICATION WITHOUT NOTICE.

MODELS: RSCA3-(N5, L5)

Item No.	Part No.	Description
1	42129000	Plenum Box Assembly
2	42192000	Emitter Kit (includes items 3 & 4)
3	40446080	End Gasket (Qty. 2)
4	40446130	Side Gasket (Qty. 2)
5	42133000	Screen Retainer (Qty. 2)
6	41748030	Reverb Screen
7	40710020	End Reverb Baffle
8	40621000	End Flue Collar
9	42132000	Side Flue Collar
10	42136000	Venturi Assembly
11	40666000	Venturi Gasket
12	03339080	Plug, 1/2
14	03333220	Nipple, 1/2 x 6"
15	03625420	Main Burner Orifice (#42) Nat. Gas
16	30236530	Main Burner Orifice (#53) LP Gas
17	41156000	Reverb Baffle Assembly
18	30333030	Gas Valve @ 3-1/2" WC - VR8205A-2008 Nat. Gas
19	30333040	Gas Valve @ 10" WC - VR8205A-2081 LP Gas
20	42125000	Reflector Assembly
21	42429000	End Flue Collar (ignition end)
21a	42468000	End Flue Collar (ignition end with bleed tube hole) LP Gas
22	30216000	Spark Electrode #PSE-GF2
23	03763000	Flame Sensor #PSE-GF3
24	30314070	Ignition Cable - 7"
25	30198040	Spark Ignition Module #S87C-1030
26	42829000	Bracket Assembly - Module/Transformer
27	42830000	Bracket Cover Plate
28	30148000	Plastic Bushing
29	42831000	Radiation Shield
30	30279000	Transformer - 120/24V
31	42043030	Orifice Fitting Assembly - Bleed Tube (LP Gas Only)
32	30203000	Break-Away Fitting - 1/8"
33	42042000	Bleed Tube & Clamp Assembly (LP Gas Only)
34	43219000	Installation Manual (not shown)
35	42849000	Label – Nameplate
36	42875000	Label – General Warnings
37	43247010	Label – Clearances to Combustibles
38	41250000	Label – Angle Mounting
39	42052000	Label – Wire Connection Diagram

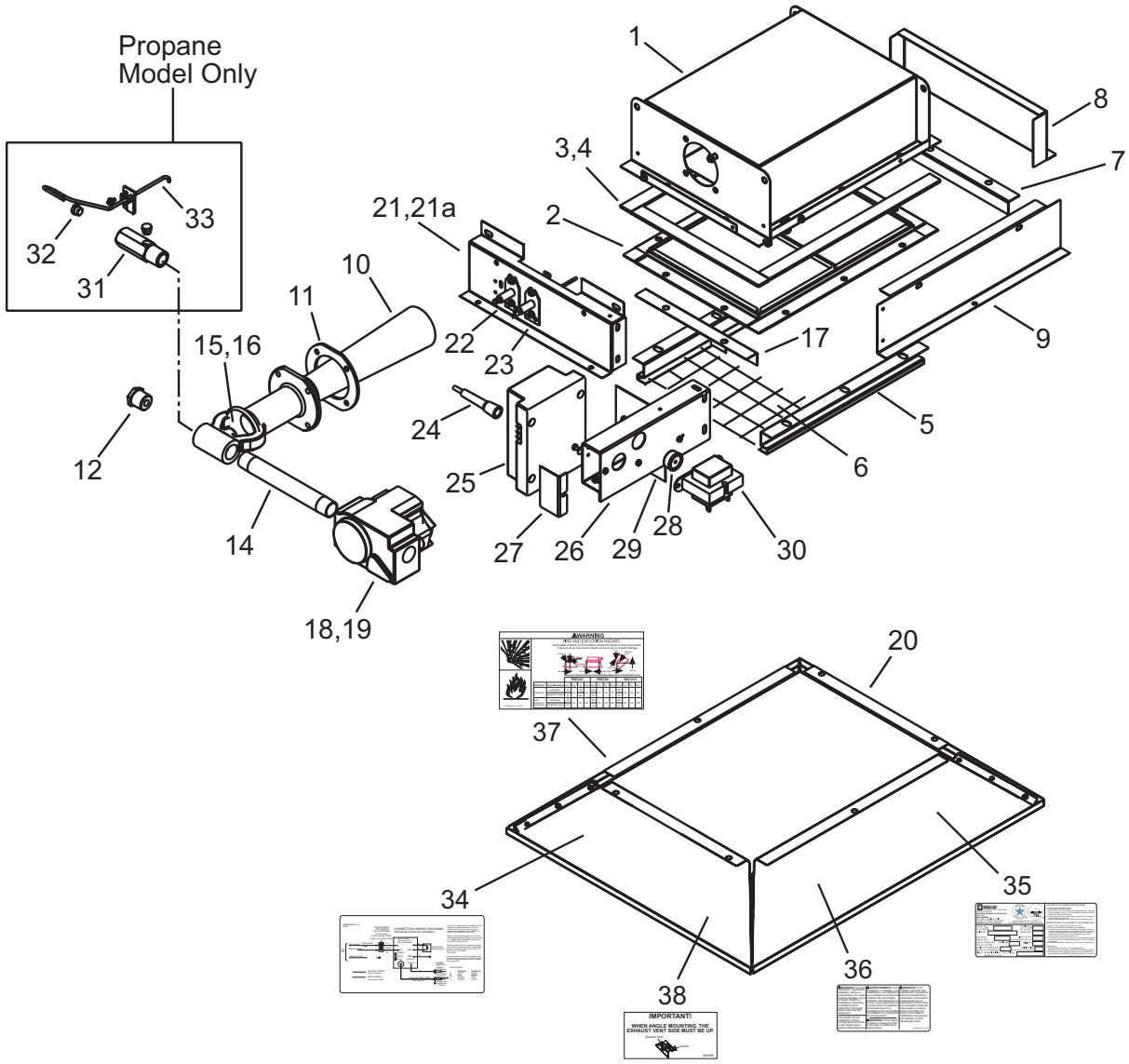
Propane
Model Only
1
8
3,4
7
21,21a
2
10
11
22
23
17
9
15,16
24
5
12
25
6
14
27
26
29
28
30
18,19
20
37
34
35
36
38
IMPORTANT!
WHEN ANGLE MOUNTING, THE EXHAUST VENT SIDE MUST BE UP.

MODELS: RSCA6-(N1A, L1)

Item No.	Part No.	Description
1	40714000	Plenum Box Assembly
2	41218000	Emitter Kit (includes items 3 & 4)
3	40446080	End Gasket (Qty. 2)
4	40446090	Side Gasket (Qty. 2)
5	40608000	Screen Retainer (Qty. 2)
6	40670030	Reverb Screen (pilot)
7	40710020	End Reverb Baffle
8	40621000	End Flue Collar
9	40616000	Side Flue Collar
10	40726000	Venturi Assembly
11	40666000	Venturi Gasket
12	03339080	Plug, 1/2
14	03333100	Nipple, 1/2 x 3"
15	03624320	Main Burner Orifice (#32) Nat. Gas
16	03625450	Main Burner Orifice (#45) LP Gas
17	40710010	Reverb Baffle (notched)
18	30299020	Gas Valve @ 6" WC - VS820A-1070 Nat. Gas
19	30299030	Gas Valve @ 10" WC - VS820A-1120 LP Gas
20	40720000	Reflector Assembly (pilot)
21	42431000	Pilot Housing Assembly
22	42425000	Radiation Shield (housing)
23	42421000	Pilot Flue Baffle
24	42424000	Pilot Shield
25	42434000	Pilot Tubing
26	40706000	Radiation Shield (pilot)
27	03462130	Pilot Generator System - Nat. Gas
28	03462140	Pilot Generator System - LP Gas
29	03463000	Pilot Burner, Less Orifice (included in items #27 & #28)
30	03460030	Pilot Orifice, TL020 - Nat. Gas (included in item #27)
31	03438020	Pilot Orifice, TV011 - LP Gas (included in item #28)
32	03378060	Generator Cartridge, PG9 (included in items #27 & #28)
33	43219000	Installation Manual (not shown)
34	42849000	Label – Nameplate
35	43247010	Label – Clearances to Combustibles
36	42875000	Label – General Warnings
37	41250000	Label – Angle Mounting

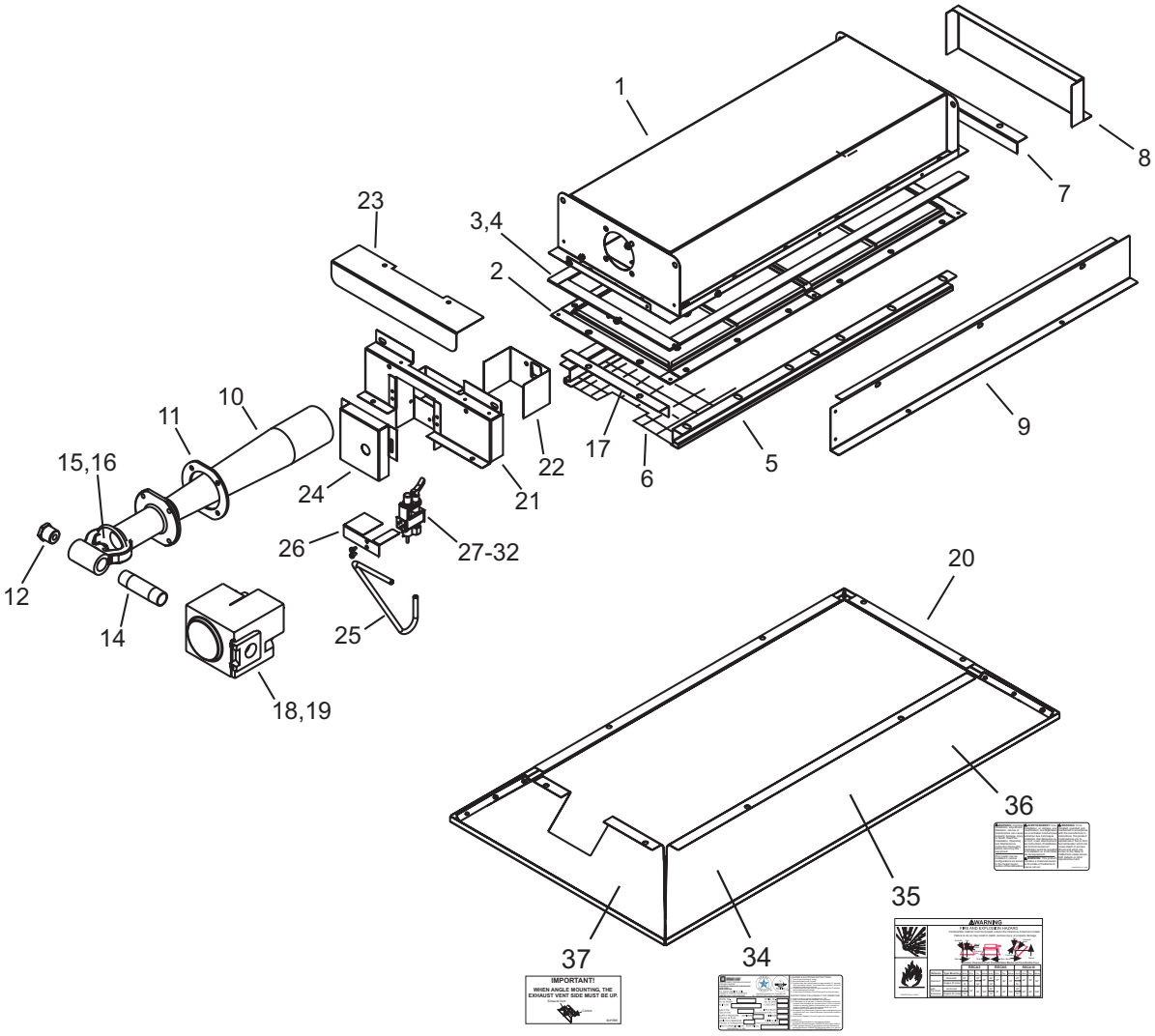
1
8
7
23
3,4
2
9
10
11
15,16
17
6
5
22
21
24
26
27-32
12
14
25
18,19
20
36
35
37
34
IMPORTANT!
WHEN ANGLE MOUNTING THE EXHAUST VENT SIDE MUST BE UP.
WARNING

MODELS: RSCA6-(N5A, L5)

Item No.	Part No.	Description
1	40714000	Plenum Box Assembly
2	41218000	Emitter Kit (includes items 3 & 4)
3	40446080	End Gasket (Qty. 2)
4	40446090	Side Gasket (Qty. 2)
5	40608000	Screen Retainer (Qty. 2)
6	41748010	Reverb Screen
7	40710020	End Reverb Baffle
8	40621000	End Flue Collar
9	40616000	Side Flue Collar
10	40726000	Venturi Assembly
11	40666000	Venturi Gasket
12	03339080	Plug, 1/2
14	03333220	Nipple, 1/2 x 6"
15	03624320	Main Burner Orifice (#32) Nat. Gas
16	03625450	Main Burner Orifice (#45) LP Gas
17	41156000	Reverb Baffle Assembly
18	30333050	Gas Valve @ 6" WC - VR8205A-2123 Nat. Gas
19	30333040	Gas Valve @ 10" WC - VR8205A-2081 LP Gas
20	41159000	Reflector Assembly
21	42429000	End Flue Collar (ignition end)
22	30216000	Spark Electrode #PSE-GF2
23	03763000	Flame Sensor #PSE-GF3
24	30314070	Ignition Cable - 7"
25	30198040	Spark Ignition Module #S87C-1030
26	42829000	Bracket Assembly - Module/Transformer
27	42830000	Bracket Cover Plate
28	30148000	Plastic Bushing
29	42831000	Radiation Shield
30	30279000	Transformer - 120/24V
31	43219000	Installation Manual (not shown)
32	42849000	Label – Nameplate
33	43247010	Label – Clearances to Combustibles
34	42875000	Label – General Warnings
35	41250000	Label – Angle Mounting
36	42052000	Label – Wire Connection Diagram

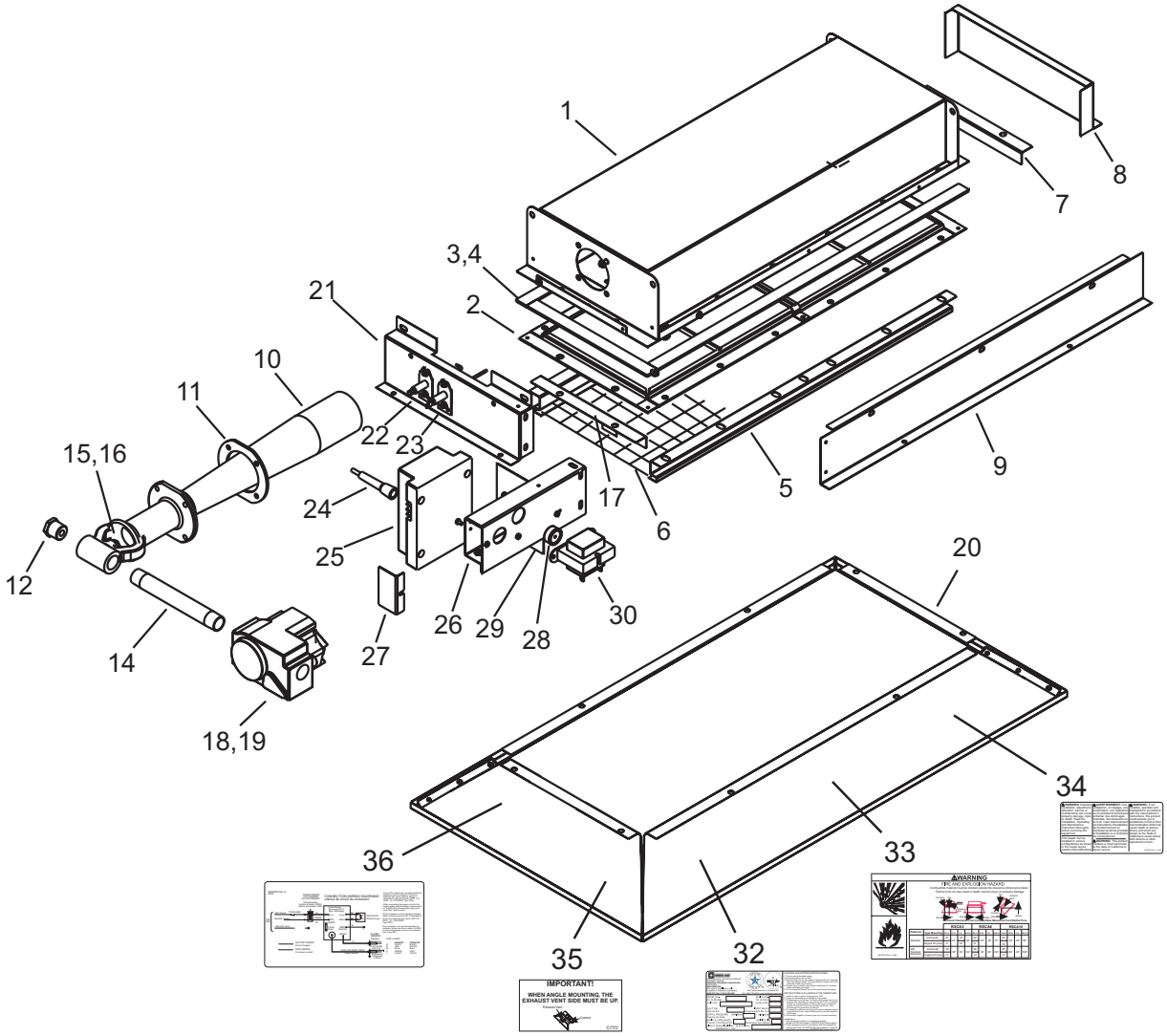
1
8
7
3,4
2
21
10
11
22
23
15,16
24
25
17
6
5
9
12
26
29
28
30
20
14
27
18,19
34
36
33
35
32
IMPORTANT!
WHEN ANGLE MOUNTING, THE EXHAUST VENT SIDE MUST BE UP.
WARNING

MODELS: RSCA10-(N5A, L5)

Item No.	Part No.	Description
1	40742000	Plenum Box Assembly
2	41219000	Emitter Kit (includes items 3 & 4)
3	40446080	End Gasket (Qty. 2)
4	40446110	Side Gasket (Qty. 2)
5	40747000	Screen Retainer (Qty. 2)
6	41748020	Reverb Screen
7	41156000	Reverb Baffle Assembly (ignition end)
8	40710020	Reverb Baffle (back end)
9	40621000	End Flue Collar
10	40744000	Side Flue Collar
11	40726000	Venturi Assembly (Qty. 2)
12	40666000	Venturi Gasket (Qty. 2)
13	43219000	Installation Manual (not shown)
14	03068010	Union Half - Female
15	03068020	Union Half - Male
16	03068030	Union Nut - 1/2
17	42043030	Orifice Fitting Assembly - Bleed Tube
18	41157000	Reflector Assembly
19	03624320	Main Burner Orifice (#32) Nat. Gas (Qty. 2)
20	03625450	Main Burner Orifice (#45) LP Gas (Qty. 2)
21	30203000	Break-Away Fitting - 1/8"
22	42042000	Bleed Tube & Clamp Assembly
23	03333060	Nipple, 1/2 x 2"
24	03336080	Tee, 1/2
25	03333020	Nipple, 1/2 x Close
26	30333050	Gas Valve @ 6" WC - VR8205A-2123 Nat. Gas
27	30333040	Gas Valve @ 10" WC - VR8205A-2081 LP Gas
28	42468000	End Flue Collar (ignition end)
29	30216000	Spark Electrode #PSE-GF2
30	03763000	Flame Sensor #PSE-GF3
31	42420000	Manifold Clamp (Qty. 2)
32	04703000	Manifold Support Bracket (Qty. 2)
33	03600040	Compression Sleeve - 5/8 (Qty. 2)
34	03601040	Compression Nut - 5/8 (Qty. 2)
35	03602100	Compression Union - 5/8 Tube x 1/2 NPT (Qty. 2)
36	42432000	Manifold Tubing
37	03339080	Plug, 1/2
38	30198040	Spark Ignition Module #S87C-1030
39	30148000	Plastic Bushing
40	30279000	Transformer - 120/24V
41	30314070	Ignition Cable - 7"
42	42829000	Bracket Assembly - Module/Transformer
43	42830000	Bracket Cover Plate
44	42831000	Radiation Shield
45	42849000	Label – Nameplate
46	43247010	Label – Clearances to Combustibles
47	42875000	Label – General Warnings
48	41250000	Label – Angle Mounting
49	42052000	Label – Wire Connection Diagram

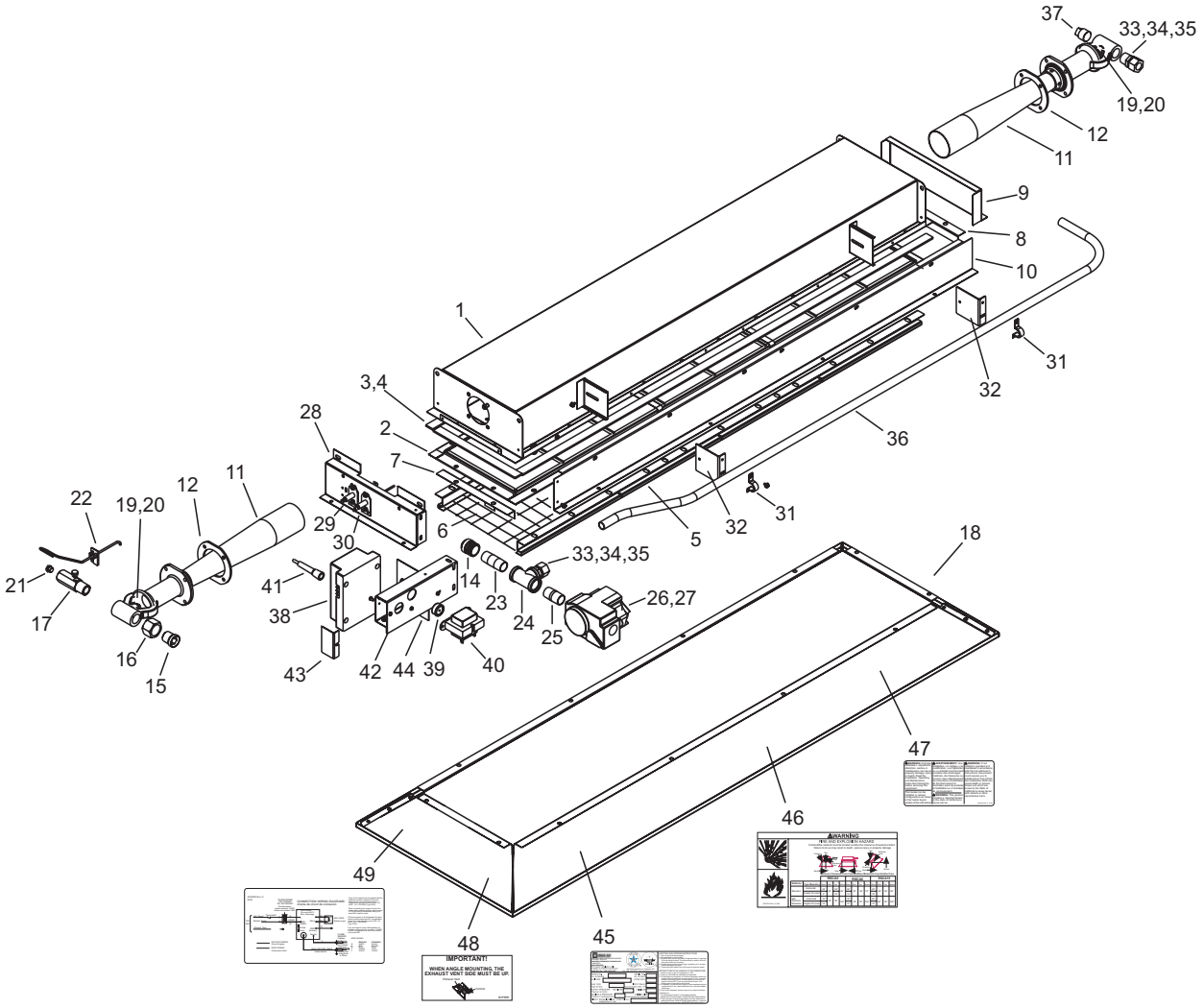
37
33,34,35
19,20
12
11
9
8
10
1
31
32
3,4
28
2
7
36
22
19,20
12
11
29
6
5
32
31
30
33,34,35
18
21
41
14
23
26,27
17
38
24
25
16
15
43
42
44
39
40
47
46
49
48
45
IMPORTANT!
WHEN ANGLE MOUNTING THE EXHAUST VENT SIDE MUST BE UP.
WARNING

SPACE-RAY
INFRARED GAS HEATERS

LIMITED WARRANTY: Gas-Fired Products, Inc., the manufacturer, warrants to the original owner of any Space-Ray infrared gas heater that said heater will be free from defects in material or workmanship under normal use and service. The heater(s) shall be installed, used and maintained strictly in accordance with the manufacturer's instructions. The manufacturer's sole obligation under this warranty shall be limited to furnishing replacement parts, F.O.B. Charlotte, NC, for 12 months from the date of installation, or 18 months from the date of shipment by the manufacturer, whichever period shall expire first. Labor charges for removal of defective parts and the installation of the replacement parts are not included. This warranty applies only within the USA and Canada.

WARNING: Manufacturer's warranty shall not apply: (a) to damage to the heater when used in an atmosphere containing halogenated hydrocarbons or other corrosive chemicals. Some compounds in the air can be ingested into the equipment and can cause an accelerated rate of corrosion of some of the parts of the heating components. The use of such chemical compounds in or near the operating environment of the heater should be avoided where a longer heater life is desirable; (b) to any heater or components which have been repaired or replaced with other than factory parts, modified in any way, misused or damaged, or which have been used contrary to the manufacturer's written instructions. Replacement parts are available through Space-Ray representatives or their distributors.

LIMITATION OF WARRANTY: THERE ARE NO WARRANTIES, EXPRESS OR IMPLIED, WHICH EXTEND BEYOND THE DESCRIPTION ON THE FACE HEREOF. WITHOUT LIMITING THE FOREGOING, THE MANUFACTURER EXPRESSLY EXCLUDES ANY AND ALL IMPLIED WARRANTIES, INCLUDING BUT NOT LIMITED TO ANY IMPLIED WARRANTY OF FITNESS FOR A PARTICULAR PURPOSE AND ANY IMPLIED WARRANTY OF MERCHANTABILITY FOR ITS PRODUCTS.

If any provision of this warranty is found to be void, unenforceable or unconscionable, then the same is hereby severed and the remainder of this warranty is hereby saved and shall remain in force.

EXCLUSIVE REMEDY: The sole and exclusive remedy under this warranty is the replacement of the defective parts or heaters as hereinabove specified. THE MANUFACTURER DOES HEREBY EXPRESSLY EXCLUDE ANY AND ALL LIABILITY FOR INCIDENTAL AND CONSEQUENTIAL DAMAGES UNDER THIS OR ANY OTHER WARRANTY. Without intending to limit the aforesaid exclusion, THE MANUFACTURER DOES HEREBY EXCLUDE ANY LIABILITY UNDER THIS OR ANY OTHER WARRANTY FOR INJURIES AND COMMERCIAL LOSSES TO PROPERTY THAT RESULT FROM THE OPERATION, PROPER OR IMPROPER, OF ITS PRODUCTS.

ADDITIONAL WARRANTY ON HEAT EMITTING SURFACE AND BURNER: Manufacturer warrants to the original owner of any CSA design certified heater that, if installed, used and maintained strictly in accordance with the printed instructions received with the heater, the manufacturer will at any time during the below listed time periods, furnish at no cost to the original owner, replacement emitters or burners which have become inoperative by reason of any defect in our workmanship, materials or construction. The manufacturer's obligation under this warranty shall be limited to furnishing replacements under the following time periods from the date of installation:

	EMITTER	BURNER
RSCA SERIES	10 Years	10 Years

The manufacturer will not be responsible for labor charges incurred for removal or installation of emitters. Any transportation charges involved in the return or repair are excluded.

ADDITIONAL TERMS: Manufacturer assumes no liability for delay in performing its obligations under the aforesaid warranty. Manufacturer assumes no liability for failure in performing its obligations there under if failure results directly or indirectly from any cause beyond its control, including but not limited to acts of God, acts of Government, floods, fires, shortages of materials, strikes and other labor difficulties or delays or failures of transportation facilities.
THIS IS A NON-RESIDENTIAL PRODUCT. Installation and service shall be by a Licensed Contractor and in accordance with National and Local Codes.
When presenting warranty claims, proof of date of purchase must be submitted.
No Representative is authorized to assume for the manufacturer any liability except as set forth above.
In case of claim under this warranty, contact:

Space-Ray
P.O. Box 36485,
305 Doggett Street (28203)
Charlotte, NC 28236
(704) 372-6391