SPACE-RAY
RADIANT GAS BROODERS

INSTALLATION AND OPERATION INSTRUCTIONS

INFRARED RADIANT POULTRY TUBE HEATER

Two Stage Push Through System (Positive Pressure)

Models:

(Hot Rolled Steel)	*(Aluminized Steel)*
PCS 75/50	**PCA 75/50**
PCS 100/65	**PCA 100/65**
PCS 125/80	**PCA 125/80**
PCS 150/100	**PCA 150/100**

OWNER/INSTALLER: For your safety this manual must be carefully read before installing, operating or servicing this heater. This heater is intended for use with either Natural Gas or Propane Gas. It must be installed by a qualified service person or a licensed contractor in accordance with state and local codes. In the absence of these codes, the installation must conform to the National Fuel Gas Code ANSI Z223.1 (latest edition) also know a NFPA54 or the CAN/CGA-B149.1/2 Installation Code in Canada.

▲**WARNING:** Improper installation, adjustment, alteration, service or maintenance can cause injury, property damage or death. Refer to this manual. For assistance or additional information, consult a qualified installer, service agency or the gas supplier.

INSPECT all combustion air openings into the building and, if necessary, clear as they become blocked by litter, dust, feathers or other matter.

FOR YOUR SAFETY: EXHAUST FANS **MUST** be operating on an appropriate cycle when heaters are operating to avoid a high concentration of carbon monoxide. When used without fresh air, this brooder may give off carbon monoxide, an odorless and poisonous gas. **CARBON MONOXIDE POISONING MAY LEAD TO DEATH.** Early signs of carbon monoxide poisoning resemble the flu with headaches, dizziness and nausea. If you experience these signs, **GET FRESH AIR IMMEDIATELY!** Have the brooders serviced as soon as possible and check the ventilation in the house.

These heaters are designed for agricultural applications and may operate with the use of either Natural Gas or Liquid Propane (LP) Gas. Check the heater's nameplate to determine the correct gas type before proceeding with installation.

IF YOU SMELL GAS:

FOR YOUR SAFETY

- **DO NOT** try to light any appliance.
- **DO NOT** touch any electrical switch; **DO NOT** use any telephone in your building.
- **IMMEDIATELY** call your gas supplier from a neighbor's telephone. Follow the gas supplier's instructions. If you cannot reach your gas supplier, call the fire department.

DO NOT store or use gasoline or other flammable vapors and liquids in the vicinity of this or any other appliance.

SAVE THIS MANUAL FOR FUTURE REFERENCE.

Form #43343510
July 08

TABLE OF CONTENTS

SECTION	DESCRIPTION	PAGE
1.0)	Safety	2
2.0)	Installer Responsibility	2
3.0)	General Information	2
4.0)	Minimum Clearances To Combustibles	4
5.0)	Specifications	5
6.0)	Packing List	5
6.1)	Accessory Packages	8
7.0)	Typical Layouts (straight configurations)	10
8.0)	Dimensions (straight configurations)	11
8.1)	Dimensions (with optional U-bend)	12
8.2)	Heater Assembly / Joining of Tube Sections	13
9.0)	Typical Suspension Methods	15
10.0)	Assembly of Tube Sections	16
10.1)	Assembly of Extension Section	17
10.2)	Inserting Turbulators	18
10.3)	Adding Reflectors	19
11.0)	Adding 180° U-Bend (20ft, 40ft and 60ft systems only)	20
11.1)	Adding Optional U-Bend (20ft, 40ft and 60ft systems only)	20
12.0)	Attaching Control Box Assembly	21
12.1)	Connecting The TISS System	22
13.0)	Gas Connections And Regulations	25
14.0)	Instructions For Pressure Test Gauge Connection	27
15.0)	Electrical Connections	28
16.0)	Venting	31
17.0)	Air For Combustion	33
17.1)	Direct Outside Air For Combustion (horizontal through a sidewall	33
17.2)	Air For Combustion (through a ceiling)	34
18.0)	Lighting And Shutdown Instructions	35
19.0)	Sequence Of Operation	36
20.0)	Burner Component Location	37
21.0)	Cleaning And Maintenance	38
22.0)	Troubleshooting Guide	39
23.0)	Replacing Parts	42
23.1)	Removal Of Burner Casting and Electrodes	42
23.2)	Removal Of Gas Valve And Manifold Assembly	43
23.3)	Air Switch Pressure Check	43
23.4)	Ignition System Checks	44
24.0)	Installation Data	46
25.0)	Replacement Parts Guide	46

1.0) SAFETY

This heater is a self-contained two stage infrared radiant tube heater designed for use in poultry houses. Safety information required during installation and operation of this heater is provided in this manual and the labels on the product. The installation, service and maintenance of this heater must be performed by a contractor qualified in the installation and service of gas fired heating equipment.

All personnel in contact with the heater must read and understand all safety information, instructions and labels before operation. The following symbols will be used in this manual to indicate important safety information.

⚠ WARNING — **Warning** instructions must be followed to prevent or avoid hazards which may cause serious injury, property damage or death.

⚠ CAUTION — **Caution** instructions must be followed to prevent incorrect operation or installation of the heater which may cause minor injury or property damage.

2.0) INSTALLER RESPONSIBILITY

The installer is responsible for the following:

- The heater and venting, as well as electrical and gas supplies must be installed in accordance with these installation instructions and any applicable codes and regulations.
- Every heater shall be located with respect to building construction and other equipment so as to permit access to the heater.
- Each installer must follow the clearances to combustibles materials for the heaters.
- Install the heater so that the supports and hangers are correctly spaced in accordance with these instructions. The heater must be supported by materials having a working load limit of at least 115lbs.
- Ensure that the tube integrity safety system TISS™ supplied is installed in accordance with these instructions and that the tension is correct.
- Supply the owner with a copy of these Installation and Operation Instructions.
- Ensure that the heater installed in a poultry house has outside air supplied to the burner for combustion.
- Never use the heater as a support for a ladder or other access equipment. Do not hang anything from the heater.
- Supply all installation materials necessary that are not included with the heater.
- Check the nameplate to make sure that the burner is correct for the gas type in the building and the installation altitude.

3.0) GENERAL INFORMATION

This heater is a self-contained infrared radiant tube heater designed for use in poultry houses where flammable gases or vapors are not generally present. (as defined by OSHA acceptable limits) and is intended for the heating of **nonresidential** spaces.

INSTALLATION REQUIREMENTS

The installation must conform to local building codes or in the absence of local codes, with the National Fuel Gas Code ANSI Z223.1/NFPA54 or the Natural Gas and Propane Installation Code CSAB149.1. Heaters shall be installed by a licensed contractor or licensed installer. Clearances to combustibles as outlined in this manual should always be observed. In areas used for storage of combustible materials where they may be stacked below the heater, NFPA54 requires that the installer must post signs that will "specify the maximum permissible stacking height to maintain the required clearances from the heater to combustibles."

Inspect all openings regularly and clean as necessary. This is necessary because litter, dust, feathers and other matter can become airborne and clog openings and adversely affect heater operation and performance.

This heater is for **INDOOR INSTALLATION ONLY** and is used in **VENTED or UNVENTED** mode. The term *Unvented* actually means *Indirect Vented*. While the products of combustion are expelled into the building, national codes require ventilation in the building to dilute these products of combustion. This ventilation must be provided by gravity or mechanical means. Ventilation requirements are addressed further in these instructions.

This heater complies with No. 8-94 (CSA US Requirements, IAS Requirements for Gas-Fired Brooders) and CAN1 2.20 (Gas-Fired Brooders).
Copies of the National Fuel Gas Code (ANSI Z223.1-latest edition) are available from the CSA at 8501 E. Pleasant Valley Rd., Cleveland, OH 44131 or 55 Scarsdale Road, Don Mills, Ontario M3B 2R3. All NFPA codes are available from the National Fire Protection Association, Batterymarch Park, Quincy, MA 02269.

Although these heaters may be used in many applications other than space heating (e.g., process heating), Space-Ray will not recognize the warranty for any use other than space heating.

This heater is not an explosion proof heater. Where the possibility of exposure to volatile and low flash point materials exists, it could result in property damage or death. This heater must not be installed in a spray booth where the heater can operate during the spraying process. Consult your local fire marshal or insurance company.

Because tube heaters installed in a straight configuration are always hotter at the burner end than at the flue terminal end, always observe the minimum recommended mounting heights shown on the specification sheets and in Section 5 of this manual. Use U-tube configuration instead of straight tubes for spot or area heating (e.g., where a single heater is utilized for space heating).

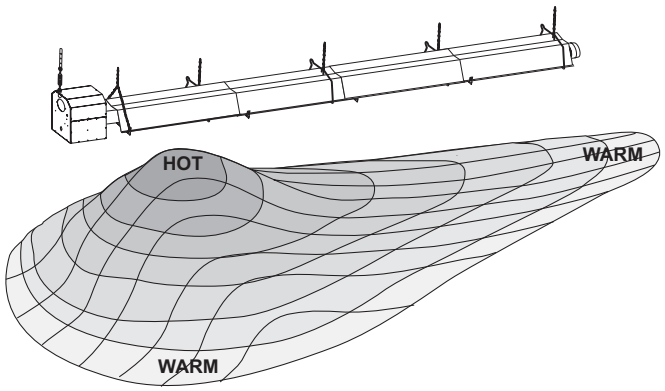

<u>High Altitude</u>:

Appliances are supplied as standard for altitudes of 0 to 2,000 feet (0-610 m). High-altitude ratings are obtained by a change in the orifice size. When ordered for high altitude installations, burners are supplied by the factory ready for high altitude installation. Check the nameplate for altitude before proceeding with the installation. In Canada the adjustment for altitude is made in accordance with Standard CGA 2.17, Gas-Fired Appliances for Use at High Altitudes.

<u>! ATTENTION</u>: SAVE THIS MANUAL FOR FUTURE REFERENCE.

4.0) MINIMUM CLEARANCES TO COMBUSTIBLES

⚠ WARNING

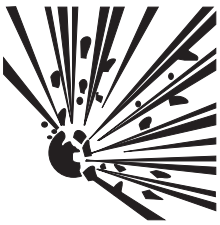

FIRE AND EXPLOSION HAZARD

Explosive and flammable objects, liquids and vapors close to the heater may result in explosion or fire.

All Combustible materials must be located outside the clearance dimensions listed.

Failure to do so may result in death, serious injury or property damage.

Minimum clearances to combustibles shall be measured from the outer surfaces as shown in the following diagram:

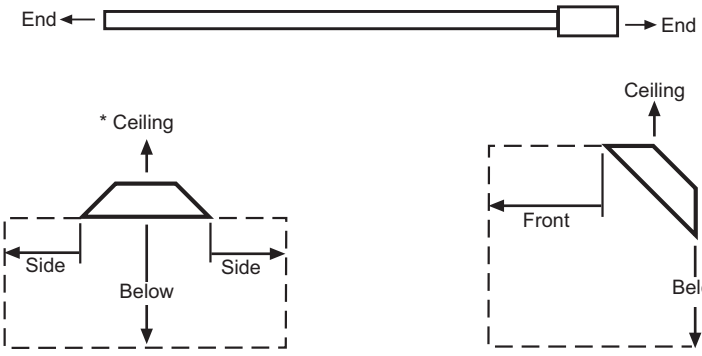

Horizontal **45° Angle (Maximum)**

MINIMUM CLEARANCES TO COMBUSTIBLES

Model No.	Mounted Horizontally				Angle Mounted at 45°	
	Sides	Ceiling*	Below	Ends	45° Front	45° Rear
PCS/PCA 75/50	27"	18"	60"	30"	48"	12"
PCS/PCA 100/65	66"	18"	88"	40"	66"	20"
PCS/PCA 125/80	66"	18"	101"	40"	66"	20"
PCS/PCA 150/100	84"	18"	106"	48"	84"	24"

* When operated UNVENTED Ceiling clearances are 18" within 3ft of the exhauster. The clearances to combustibles above reflectors are 6" until the last 3 ft of the heater. If the heater is vented the clearances to combustibles are reduced to 6" from the ceiling.

▲WARNING: Certain materials or objects, when stored under the heater, will be subjected to radiant heat and could be seriously damaged. Observe the Minimum Clearances to Combustibles listed in the manual and on the heater at all times.

NOTE: The clearances specified above must be maintained to combustibles and other materials that may be damaged by temperatures 90°F above ambient temperature. Clearances to combustibles are posted on the control box. In areas used for storage of combustible materials where they may be stacked below the heater, NFPA54 requires that the installer must post signs that will "specify the maximum permissible stacking height to maintain the required clearances from the heater to combustibles." Space-Ray recommends posting these signs adjacent to the heater thermostat or other suitable location that will provide enhanced visibility.

.

5.0) PCS/PCA SERIES — SPECIFICATIONS

Model No.	Btu/hr Input	Combustion Air Plate Part #	Orifice Size		Minimum Mounting Height		Turbulator Qty.
			Natural Gas	*Propane Gas*	*Horizontal*	*45° Angle*	
PCS/PCA 75/50	75,000	#44140063	#21	2.5mm	8 ft.	8 ft.	5
PCS/PCA 100/65	100,000	#44140065	#12	#32	8 ft.	8 ft.	3
PCS/PCA 125/80	125,000	#44140066	#4	#30	9 ft.	9 ft.	6
PCS/PCA 150/100	150,000	#44140067	"A"	#27	9 ft.	9 ft.	4

Type Gas:	Gas-Pipe Connection:	Tube Diameter:	Flue Connection:	Fresh Air Connection:	Electrical Supply:	Current Rating:
Natural or Propane	½" MPT (Male)	4"	4" Round	4" Round	120 Volt, 60Hz, 1 Phase	1.74 Amp

Module Electrical Rating:	**Ignition System (direct spark):**
Input Power-Control: 18-30 VAC 50/60 Hz (class 2 transformer) Input Power-Line: 120 VAC (L1, IND contacts only) Gas Valve Rating: 2.0 A @ 24 VAC (max.) Combustion Blower Rating: 3.0 FLA @ 120 VAC 0.0233 H.P. Motor Flame Sensitivity: 0.7 microamps minimum	15 second trial for ignition period 15 second pre-purge period 60 second inter-purge period 30 second post-purge period (with 24V thermostat only) 3 tries for ignition (separate flame sensor).

6.0) PCS/PCA SERIES – PACKING LIST

A) **PCS/PCA Burner Package** **QTY**

Burner Box Assembly (Refer to the following chart for Package Part Numbers) 1
4"ID x 4"Lg Flue Adapter Collar (#30504500) 1
Fastener Kit – Burner Box Attachment/Flue Adapter Collar (#42907040).....1
containing: #10 x 1/2" Self-Drilling Screws (#02189020).....2
¼ - 20 Locknuts (#02167010).....3
Tube Flange Gasket (#42921000) 1
Turbulator 24" Long (#44152240) * See chart above for required quantities. .....*
Installation & Operation Instructions (#43343510).....1
End Reflector Package (#43341000) 1
Manual Cut off Valve 1/2" (#30285000) 1
Flexible Gas Connector 36" Long (#30302360) 1
"S" Hooks, size #60 (#30303010) .....6 (PCS 75, 7 (PCS 100),
.....8 (PCS 125), 9 (PCS 150)

CONTROL/DRAFT INDUCER PACKAGE NUMBERS:

NATURAL GAS	
MODEL NO	*PART NO.*
PCS/A 75/50-N7	#44165510
PCS/A 100/65-N7	#44165530
PCS/A 125/80-N7	#44165550
PCS/A 150/100-N7	#44165570

PROPANE GAS	
MODEL NO	*PART NO.*
PCS/A 75/50-L7	#44165520
PCS/A 100/65-L7	#44165540
PCS/A 125/80-L7	#44165560
PCS/A 150/100-L7	#44165580

COMPLETE MODEL SYSTEM:

-Includes Burner Box and Body Package-

	MODEL	*GAS TYPE*	*SYSTEM LENGTH*	*TUBE MATERIAL 1*
PCS Series	PCS75/50-20-L7	Propane	20 ft.	Hot Rolled Steel
	PCS75/50-20-N7	Natural	20 ft.	Hot Rolled Steel
	PCS75/50-30-L7	Propane	30 ft.	Hot Rolled Steel
	PCS75/50-30-N7	Natural	30 ft.	Hot Rolled Steel
	PCS100/65-30-L7	Propane	30 ft.	Hot Rolled Steel
	PCS100/65-30-N7	Natural	30 ft.	Hot Rolled Steel
	PCS100/65-40-L7	Propane	40 ft.	Hot Rolled Steel
	PCS100/65-40-N7	Natural	40 ft.	Hot Rolled Steel
	PCS125/80-30-L7	Propane	30 ft.	Hot Rolled Steel
	PCS125/80-30-N7	Natural	30 ft.	Hot Rolled Steel
	PCS125/80-40-L7	Propane	40 ft.	Hot Rolled Steel
	PCS125/80-40-N7	Natural	40 ft.	Hot Rolled Steel
	PCS125/80-50-L7	Propane	50 ft.	Hot Rolled Steel
	PCS125/80-50-N7	Natural	50 ft.	Hot Rolled Steel
	PCS150/100-40-L7	Propane	40 ft.	Hot Rolled Steel
	PCS150/100-40-N7	Natural	40 ft.	Hot Rolled Steel
	PCS150/100-50-L7	Propane	50 ft.	Hot Rolled Steel
	PCS150/100-50-L7	Natural	50 ft.	Hot Rolled Steel
	PCS150/100-60-L7	Propane	60 ft.	Hot Rolled Steel
	PCS150/100-60-N7	Natural	60 ft.	Hot Rolled Steel

	MODEL	*GAS TYPE*	*SYSTEM LENGTH*	*TUBE MATERIAL 1*
PCA Series	PCA75/50-20-L7	Propane	20 ft.	Aluminized Steel
	PCA75/50-20-N7	Natural	20 ft.	Aluminized Steel
	PCA75/50-30-L7	Propane	30 ft.	Aluminized Steel
	PCA75/50-30-N7	Natural	30 ft.	Aluminized Steel
	PCA100/65-30-L7	Propane	30 ft.	Aluminized Steel
	PCA100/65-30-N7	Natural	30 ft.	Aluminized Steel
	PCA100/65-40-L7	Propane	40 ft.	Aluminized Steel
	PCA100/65-40-N7	Natural	40 ft.	Aluminized Steel
	PCA125/80-30-L7	Propane	30 ft.	Aluminized Steel
	PCA125/80-30-N7	Natural	30 ft.	Aluminized Steel
	PCA125/80-40-L7	Propane	40 ft.	Aluminized Steel
	PCA125/80-40-N7	Natural	40 ft.	Aluminized Steel
	PCA125/80-50-L7	Propane	50 ft.	Aluminized Steel
	PCA125/80-50-N7	Natural	50 ft.	Aluminized Steel
	PCA150/100-40-L7	Propane	40 ft.	Aluminized Steel
	PCA150/100-40-N7	Natural	40 ft.	Aluminized Steel
	PCA150/100-50-L7	Propane	50 ft.	Aluminized Steel
	PCA150/100-50-L7	Natural	50 ft.	Aluminized Steel
	PCA150/100-60-L7	Propane	60 ft.	Aluminized Steel
	PCA150/100-60-N7	Natural	60 ft.	Aluminized Steel

1 NOTE: The first 10 ft. tube section used for Burner Box mounting is Aluminized Steel on ALL length systems.

STANDARD PCS/PCA ACCESSORIES

Part #	*Description*
30285000	Manual Cut off Valve - CSA listed ball valve 1/2" (packaged with control unit)
30302240	Flexible Gas Connector 24" Long-Stainless Steel (packaged with control unit)
44129500	Kit, Fresh Air Intake-Ceiling
43341000	Kit, Reflector End Panels (packaged with control unit)
42924000	4" Exhaust Hood (for use on heater **UNVENTED**)

OPTIONAL PCS/PCA ACCESSORIES

Part #	*Description*
44129510	Kit, Fresh Air Intake-Sidewall (includes 4" vent cap)
41000020	4" Vent Cap (for use on heater **VENTED**)
44195000	2 Stage relay kit for multiple heaters controlled by a single thermostat.

B) PCS (Hot Rolled Steel System) Body Package Descriptions

(Package Part Number is indicated on the outside of each corresponding carton.)

System Lengths

PCS Body Packages – Aluminized/Hot Rolled		**20 Ft. Pkg. 44055201**	**30 Ft. Pkg. 44055301**	**40 Ft. Pkg. 44055401**	**50 Ft. Pkg. 44055501**
Part #	**Each Body Package Includes:**	***Qty.***	***Qty.***	***Qty.***	***Qty.***
42912080	10 Ft. Tube 24 Hole Flange (Aluminized)	1	1	1	1
41932101	10 Ft. Tube less Flanges (Hot Rolled)	1	2	3	4
43319100	Reflector, 9' 11½"	2	3	4	5
30462980	Tube Coupling	1	2	3	4
43318000	Tube Hanger/Support Bracket, 13"	2	3	4	5
43980010	Wire Hanger	2	3	4	5

Body Fastener Kit (included in body packages)		**42907190**	**42907200**	**42907210**	**42907220**
42873000	U-Bolt	2	3	4	5
02127110	Hex Nut, 5/16-18	5	6	8	10
02189020	HWHSM Screw, #10-16 *x* ½" TEKS	8	10	14	18

60ft system

PCS Body Packages – Aluminized/Hot Rolled		**40 Ft. Pkg. 44055401**	**20 Ft. Pkg. 44055203**
Part #	**Each Body Package Includes:**	***Qty.***	***Qty.***
42912080	10 Ft. Tube 24 Hole Flange (Aluminized)	1	-
41932101	10 Ft. Tube less Flanges (Hot Rolled)	3	2
43319100	Reflector, 9' 11½"	4	2
30462980	Tube Coupling	3	2
43318000	Tube Hanger/Support Bracket, 13"	4	2
43980010	Wire Hanger	4	2

Body Fastener Kit (included in body packages)		**42907210**	**42907190**
42873000	U-Bolt	4	2
02127110	Hex Nut, 5/16-18	8	5
02189020	HWHSM Screw, #10-16 *x* ½" TEKS	14	8

C) PCA (Aluminized Steel System) Series Body Package Descriptions

(Package Part Number is indicated on the outside of carton.)

		System Lengths			
PCA Body Packages – Aluminized		20 Ft. Pkg. 44055200	30 Ft. Pkg. 44055300	40 Ft. Pkg. 44055400	50 Ft. Pkg. 44055500
Part #	Each Body Package Includes:	*Qty.*	*Qty.*	*Qty.*	*Qty.*
42912080	10 Ft. Tube 24 Hole Flange (Aluminized)	1	1	1	1
41932100	10 Ft. Tube less Flanges (Aluminized)	1	2	3	4
43319100	Reflector, 9' 11½"	2	3	4	5
30462980	Tube Coupling	1	2	3	4
43318000	Tube Hanger/Support Bracket, 13"	2	3	4	5
43980010	Wire Hanger	2	3	4	5

Body Fastener Kit (included in body packages)		42907190	42907200	42907210	42907220
42873000	U-Bolt	2	3	4	5
02127110	Hex Nut, 5/16-18	5	6	8	10
02189020	HWHSM Screw, #10-16 *x* ½" TEKS	8	10	14	18

		60Ft. System	
PCA Body Packages – Aluminized		40 Ft. Pkg. 44055400	20 Ft. Pkg. 44055202
Part #	Each Body Package Includes:	*Qty.*	*Qty.*
42912080	10 Ft. Tube 24 Hole Flange (Aluminized)	1	-
41932100	10 Ft. Tube less Flanges (Aluminized)	3	2
43319100	Reflector, 9' 11½"	4	2
30462980	Tube Coupling	3	2
43318000	Tube Hanger/Support Bracket, 13"	4	2
43980010	Wire Hanger	4	2

Body Fastener Kit		42907210	42907190
42873000	U-Bolt	4	2
02127110	Hex Nut, 5/16-18	8	5
02189020	HWHSM Screw, #10-16 *x* ½" TEKS	14	8

6.1) ACCESSORY PACKAGES

Included with heater

A) End Reflector Accessory Package, Part #43341000
(1 pkg. for standard straight configuration or 2 pkgs. when using optional U-Bend)

Contains:
End Reflector, #43320000.....*QTY–2*
Speed Clips, #02266010.....*QTY–4*

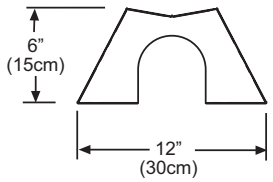

END REFLECTOR

B) Exhaust Hood Package, Part #42924000

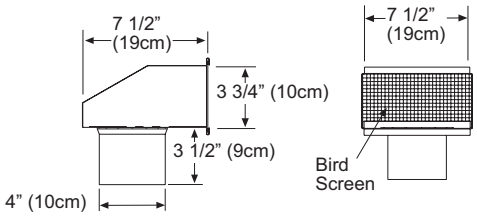

Contains:
Exhaust Hood Assembly, #42925540.....*QTY–1*
#10-16 x ½ Self-Drilling Screws, #02189020.....*QTY–2*

C) Fresh Air Inlet (Through Ceiling) Package, Part #44129500

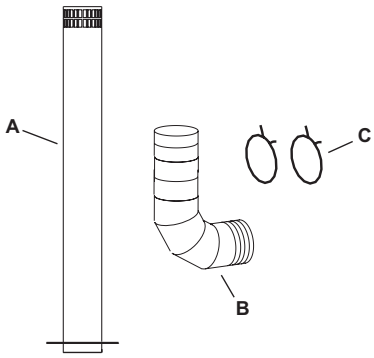

Each Fresh Air Inlet (Ceiling) Package Includes:
a) #44129000 4" Air Intake Assembly *QTY=1*
b) #30675020 4" x 2FT Flexible Hose *QTY=1*
c) #30676040 4" Spring Tension Clamp *QTY=2*
d) #02240010 #12 x 3/4" Sheet Metal Screws *QTY=4*

Optional Accessories

D) U-Bend Package, Part #43208020
(Option for 20Ft/40Ft/60Ft Models Only)

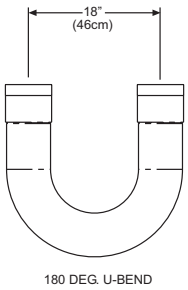

180 DEG. U-BEND

Contains:
U-Bend, #42913020.....*QTY–1*
#10-16 x ½ Self-Drilling Screws, #02189020.....*QTY–2*
Tube Coupling, #30462980.....*QTY–1*
31" Hanger/Tube Support, #43318500.....QTY–1

E) U-Bend Reflector Package, Part #43488000
(for use with optional U-Bend)

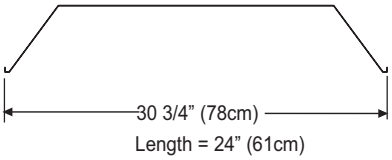

Contains:
U-Bend Reflector, #43490000.....*QTY–1*
U-Bend End Reflector, #43490050.....*QTY–1*
Speed Clips, #02266010.....*QTY–11*
#10-16 x ½ Self-Drilling Screws, #02189020.....*QTY–4*

F) 31" Hanger/Tube Support, Part #43318500
(for use with optional U-Bend)

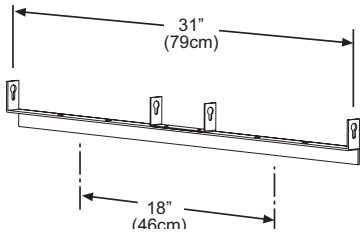

G) Fresh Air Inlet (Through Sidewall) Package, Part #44129510

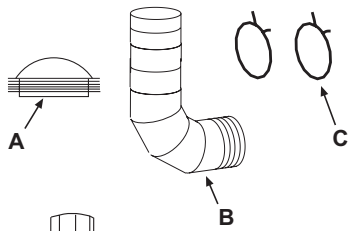

Each Fresh Air Inlet (Ceiling) Package includes:
a) #41000020 4" Vent Cap *QTY=1*
b) #30675020 4" x 2FT Flexible Hose *QTY=1*
c) #30676040 4" Spring Tension Clamp *QTY=2*

H) Relay Package, Part #44195000

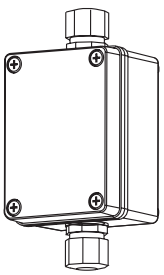

Contains:
Relay Board, #30740000.....*QTY–1*
ABS Enclosure, #30709059.....*QTY–1*
Mounting Plate, #30709058.....*QTY–1*
Water Tight Connectors, #30635010.....*QTY–2*

7.0) PCS/PCA SERIES — TYPICAL LAYOUTS (straight configurations)

⚠ WARNING

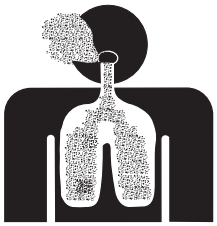

POISONOUS GAS AND SOOT HAZARD

The heater must be assembled with the correct number of turbulator sections and tube length for the rated heat input.

The turbulator must be installed in the last tube section as shown.

Failure to do so may result in death, serious injury, property damage or illness from Carbon Monoxide poisoning.

MODEL	EMITTER LENGTH *Min.*	EMITTER LENGTH *Max.*	2ft Turbulator Sections
PCS/PCA 75/50	20 Ft.	30 Ft.	5
PCS/PCA 100/65	30 Ft.	40 Ft.	3
PCS/PCA 125/80	30 Ft.	50 Ft.	6
PCS/PCA 150/100	40 Ft.	60 Ft.	4

20 FT. SYSTEM

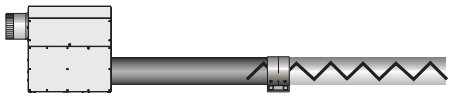

30 FT. SYSTEM

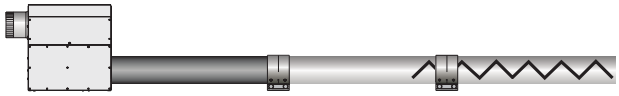

40 FT. SYSTEM

50 FT. SYSTEM

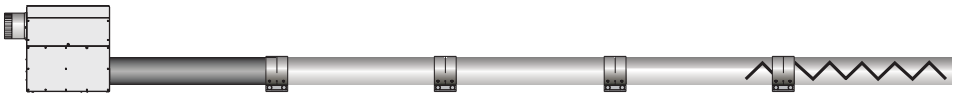

60 FT. SYSTEM

LEGEND

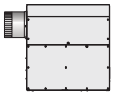

Burner Box

10ft Aluminized Tube
24 Hole Flange

Coupling

10ft Aluminized or HRS
Tube model dependent

2ft Turbulator
sections

8.0) PCS/PCA SERIES — DIMENSIONS (straight configuration)

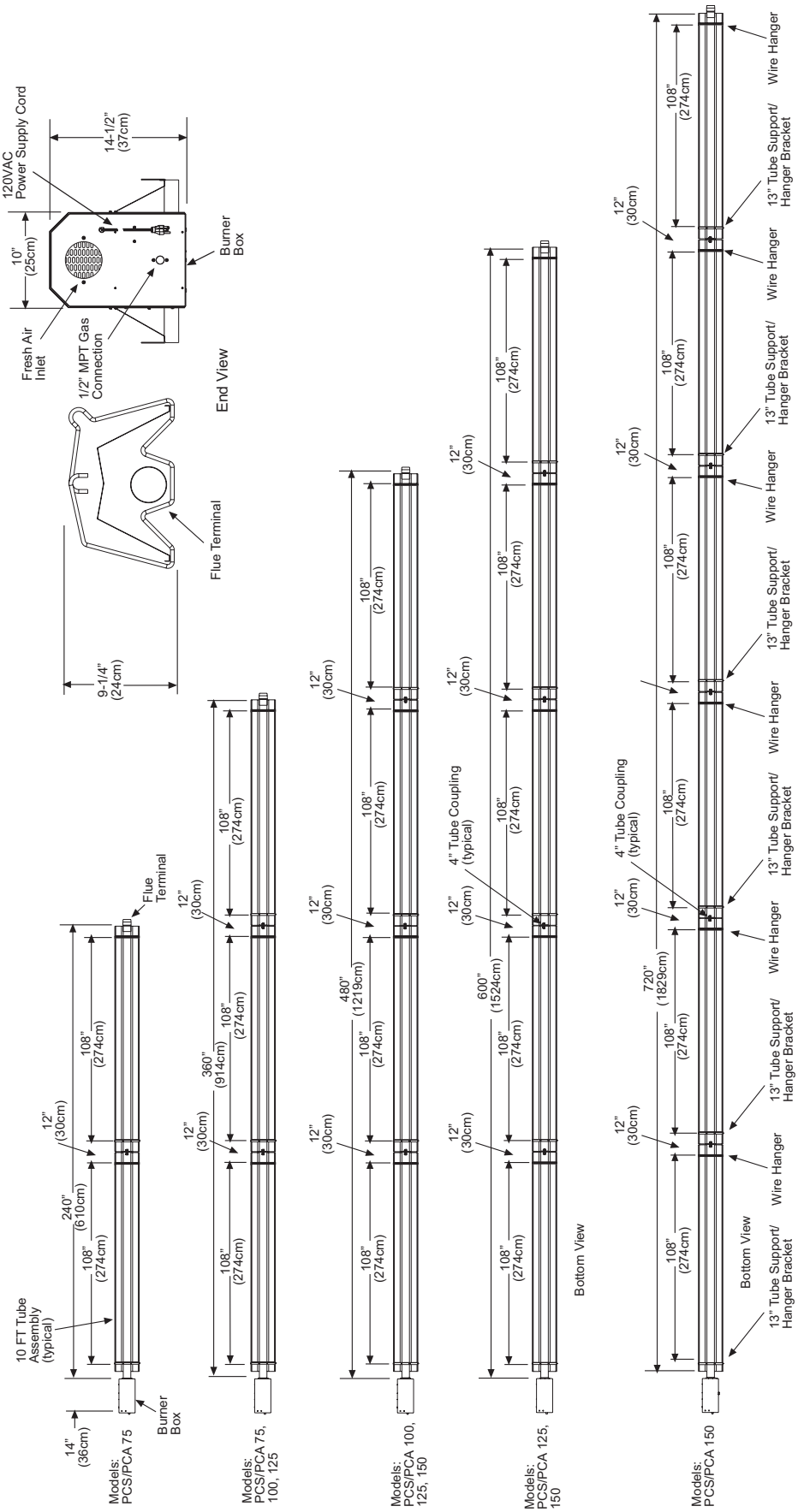

8.1) PCS/PCA SERIES — DIMENSIONS (with optional U-Bend)

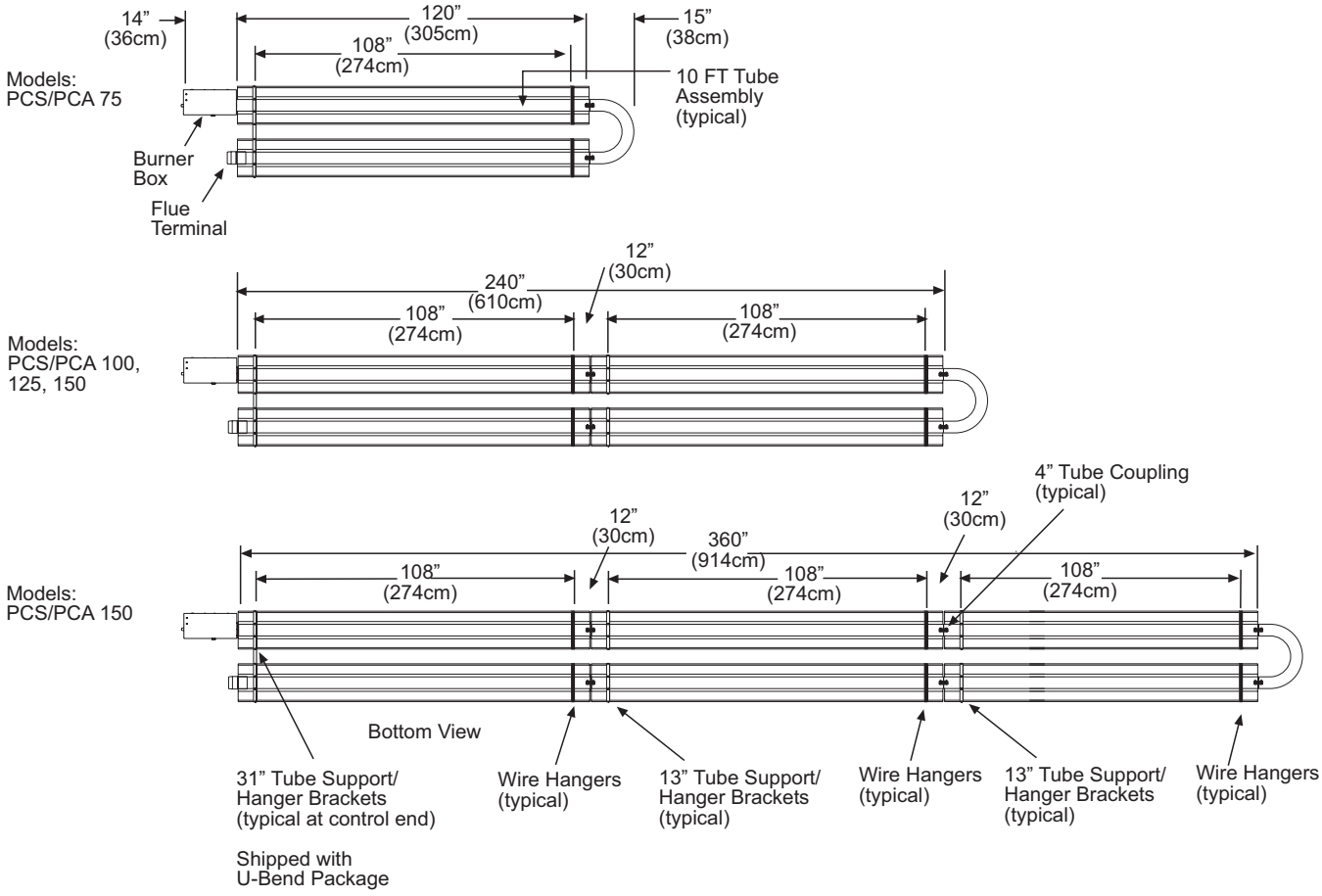

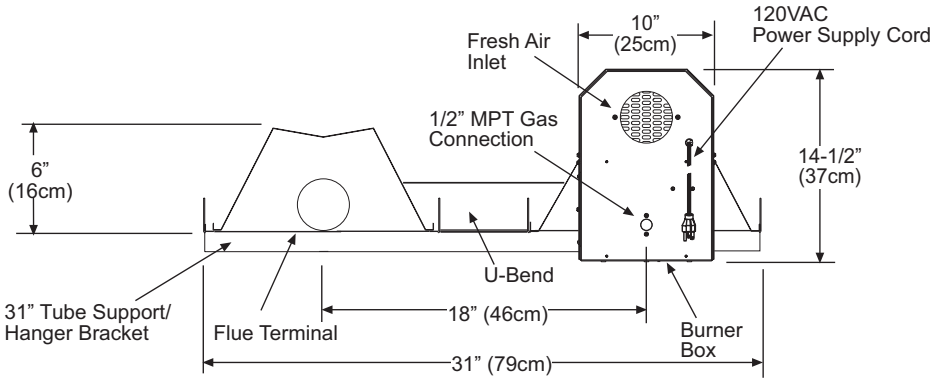

PCS/PCA with Optional U-Bend
(end view)

8.2) PCS/PCA SERIES — HEATER ASSEMBLY / JOINING OF TUBE SECTIONS

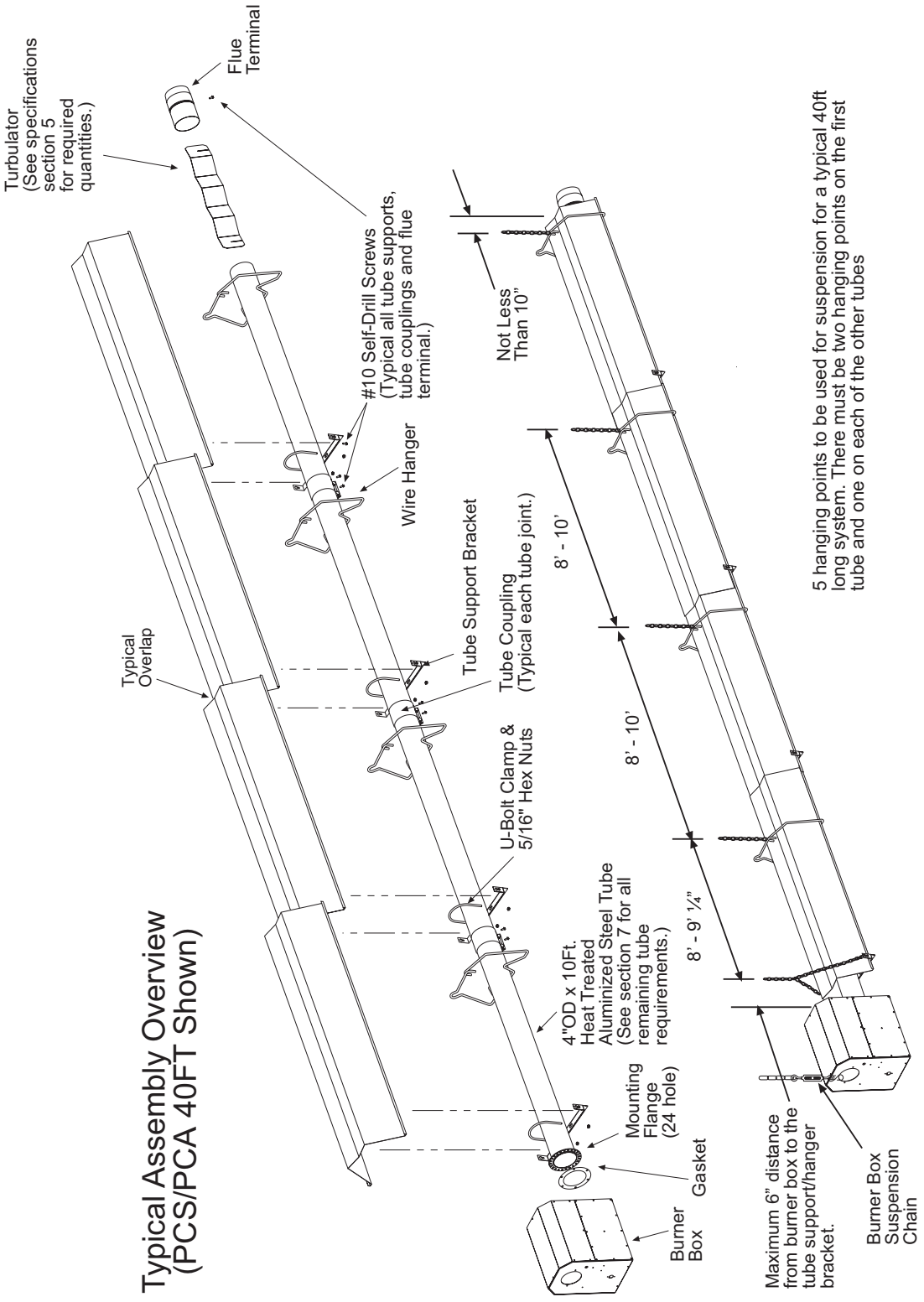

Typical Assembly Overview Using Optional U-Bend (PCS/PCA 40FT Shown)

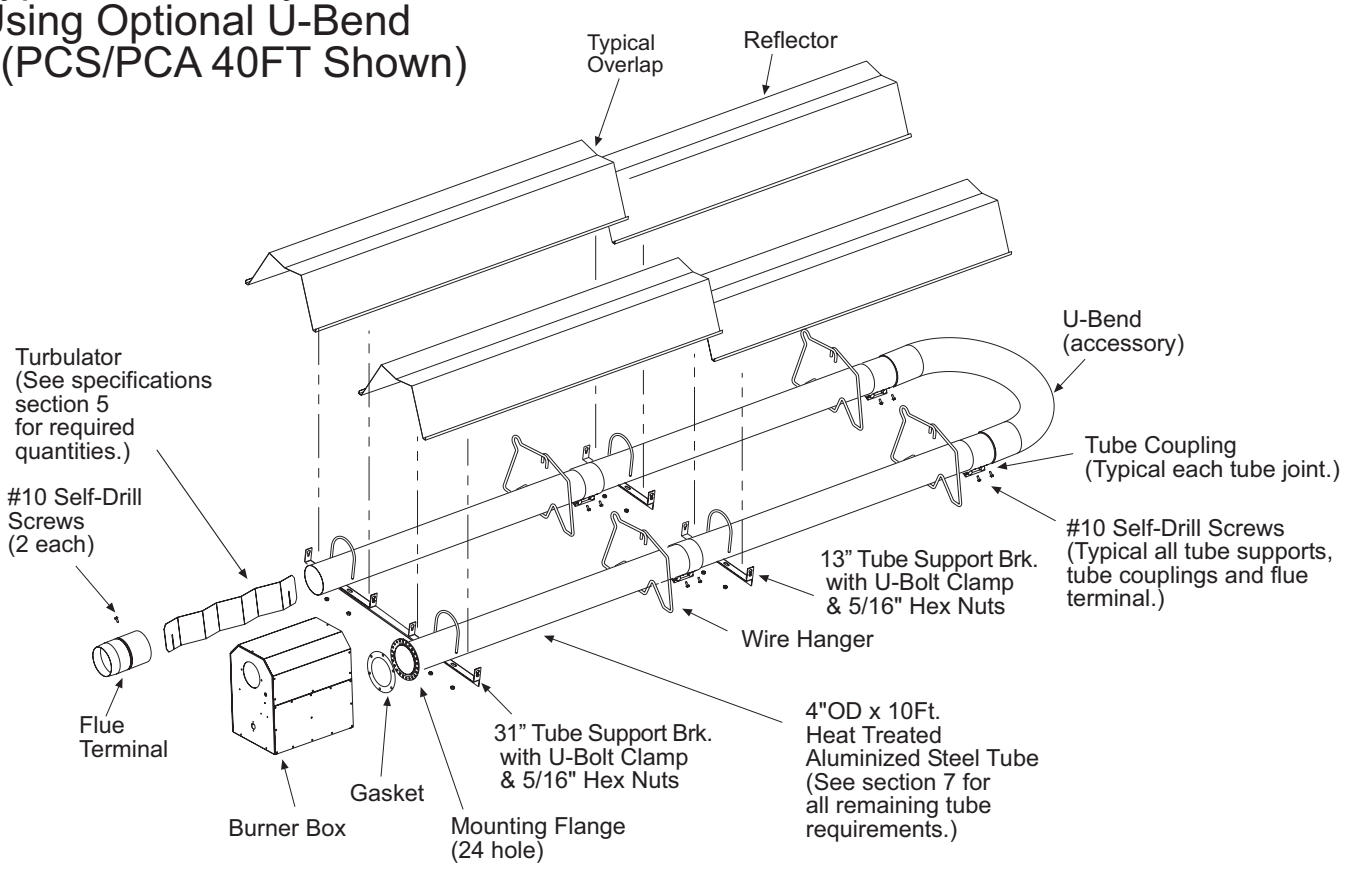

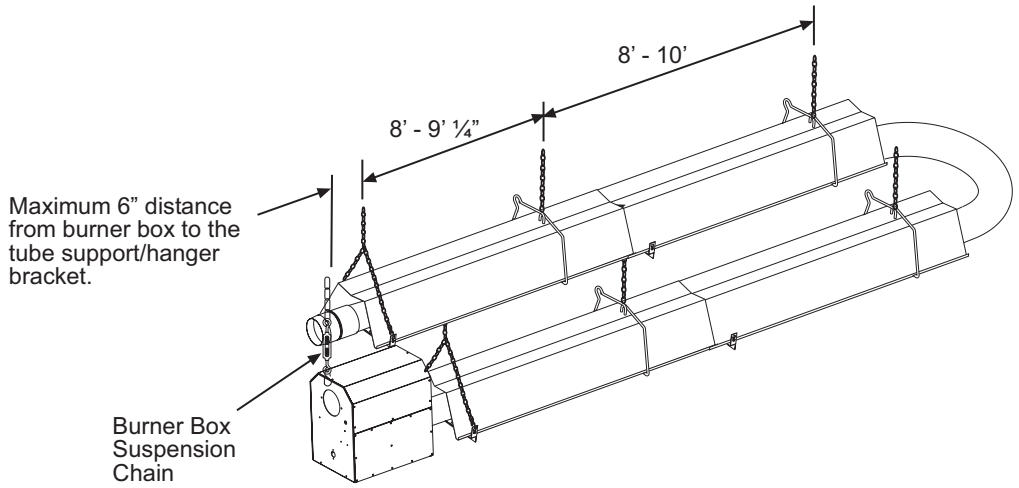

6 hanging points to be used for suspension for a typical 40ft long system. There must be two hanging points on the first tube and one on each of the other tubes

9.0) TYPICAL SUSPENSION METHODS

⚠ WARNING

SUSPENSION HAZARD

Burner must be secured to the mounting flange with nuts.

All materials used to suspend the heater must have a minimum working load of 115 lbs.

Never use the heater to support a ladder or other access equipment.

Failure to do so may result in death, serious injury or property damage.

Various means of suspending the heater can be used. See the following drawings for typical examples.

1. **Use only noncombustible materials for suspending hangers and brackets.**
2. **A minimum No. 2 chain with a working load limit of 115 lbs. is required.**
3. **Turnbuckles can be used with chains to allow leveling of the heater. All "S" hooks and eye bolts must be manually crimped closed by the installer.**
4. **When using rigid means for heater suspension (rod, flat bar, etc.) provide sufficient lengths or swing joints to compensate for expansion. See Figures b and c.**
5. **Heaters subject to vibration must be provided with vibration isolating hangers.**
6. **Heaters must not be supported by gas or electric supply lines and must be suspended from a permanent structure with adequate load capacity.**

Space-Ray recommends that the body sections be suspended using chains with turnbuckles. This will allow slight adjustments after assembly and heater expansion/ contraction during operation.

If a "trapeze" method is used for tube support/hanger bracket (shown below), the minimum chain length for the two connecting chains is 36". If these chains must be less than 36", then do not use the trapeze method and, instead, use individual chains on each tube support/hanger bracket.

⚠ CAUTION

Failure to install the burner box suspension chain vertically will void the manufacturers warranty.

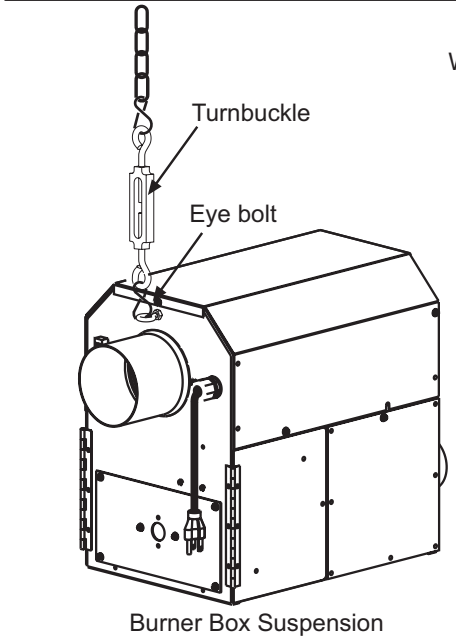

Burner Box Suspension

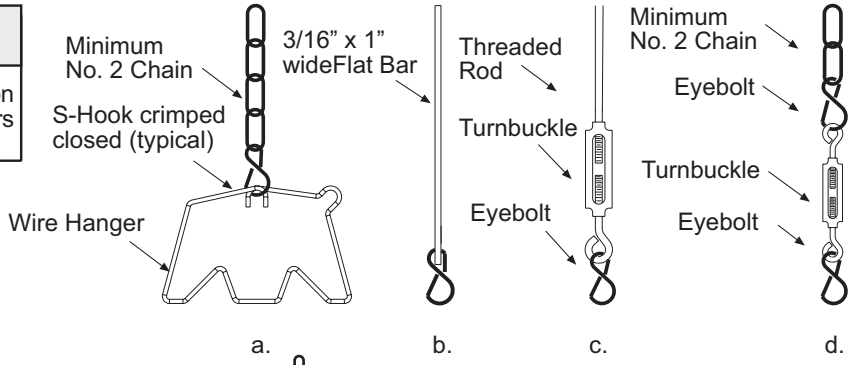

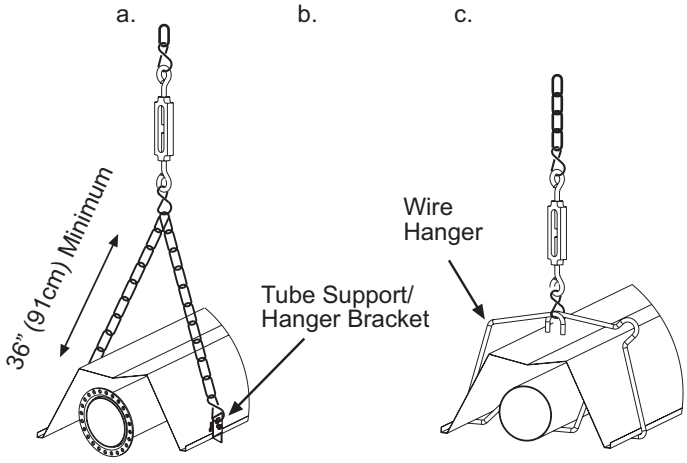

10.0) ASSEMBLY OF TUBE SECTIONS

⚠ CAUTION

CUT HAZARD

Sheet metal parts, particularly reflectors and vent have sharp edges. Always use gloves when handling.

Failure to do so may result in death, serious injury or property damage.

During field assembly of the heater body sections, the recommended procedure is as follows:

1. Before hanging heater sections, first determine the actual layout of the system (see Sections 7 and 8 for details). Consideration must also be taken for flue pipe, fresh air ducting, gas piping, clearances to combustibles, etc. before hanging heater. Typical suspension methods are shown in Section 9

2. Hang each tube section individually. **DO NOT** attach the heater tube sections together on the ground and attempt to hang the entire system.

3. The first 10' tube section must be aluminized steel with a 24-hole flange.

4. Place a tube support/hanger bracket on the end of the heat exchanger tube having the mounting flange. Align the tube such that the welded seam is facing down toward the ground.

⚠ CAUTION **FAILURE TO ASSEMBLE THE TUBE WITH THE SEAM FACING DOWN WILL VOID THE MANUFACTURER'S WARRANTY.**

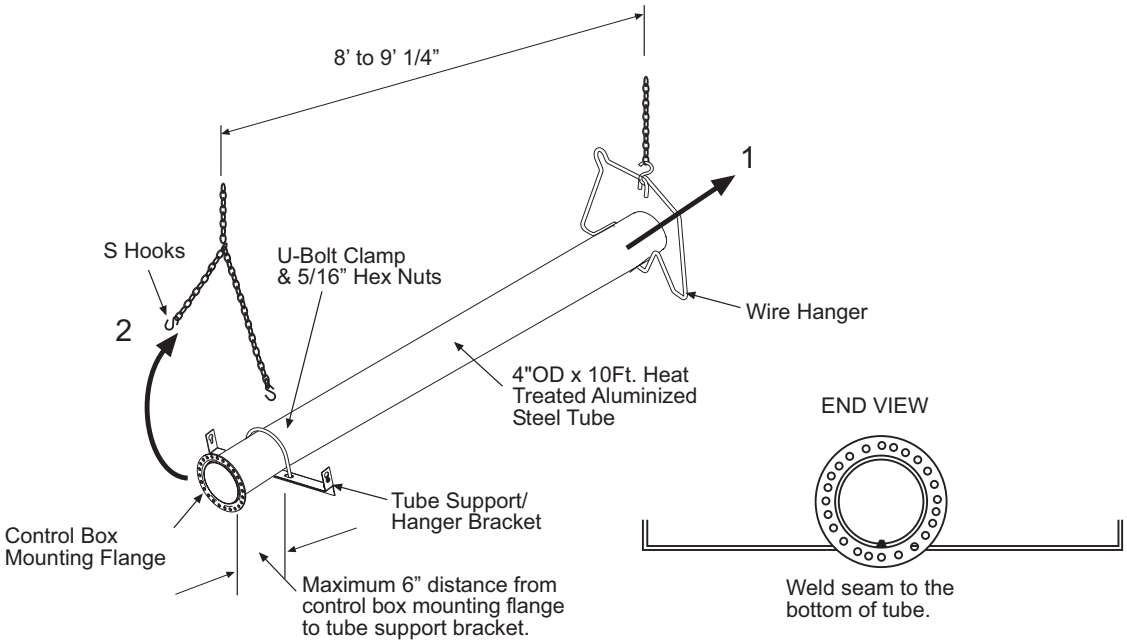

5. Space the tube support/hanger bracket 4 inches from the mounting flange (6" maximum). Secure the tube to the support/hanger bracket using a "U" Bolt clamp and two (2) 5/16-18 nuts provided. For U-tube configuration, see typical assembly overview illustration in Section 8.0.

6. Suspend the chain to attach the wire hanger and the tube support bracket. Insert the tube into the wire hanger and then raise the tube support bracket end up to the suspension chain, use "S" hooks to attach the wire hanger and tube support bracket to the chain.

10.1) ASSEMBLY OF EXTENSION SECTION

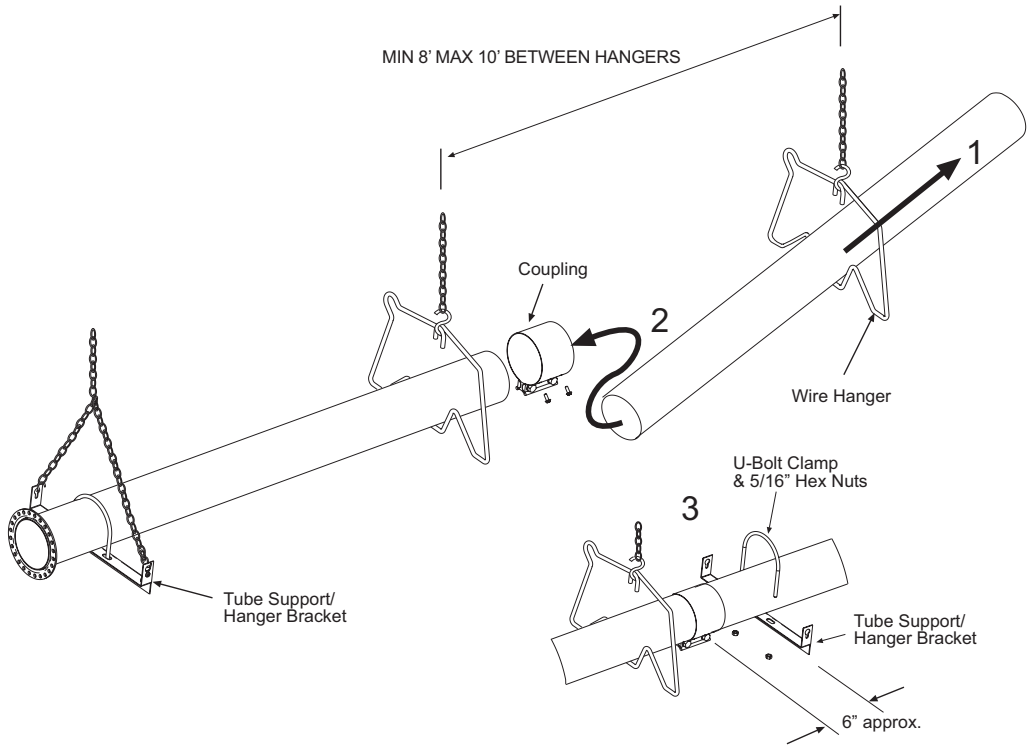

▲WARNING: THE FOLLOWING COUPLING TIGHTENING INSTRUCTIONS MUST BE FOLLOWED PROPERLY TO AVOID FUTURE PROBLEMS.

1. Place the compression coupling over the end of the tube.
2. Use the small hole at the centerline of the coupling to check that the coupling is inserted correctly.
3. Partially tighten the bolt nearest the end of the tube (approximately half closed).

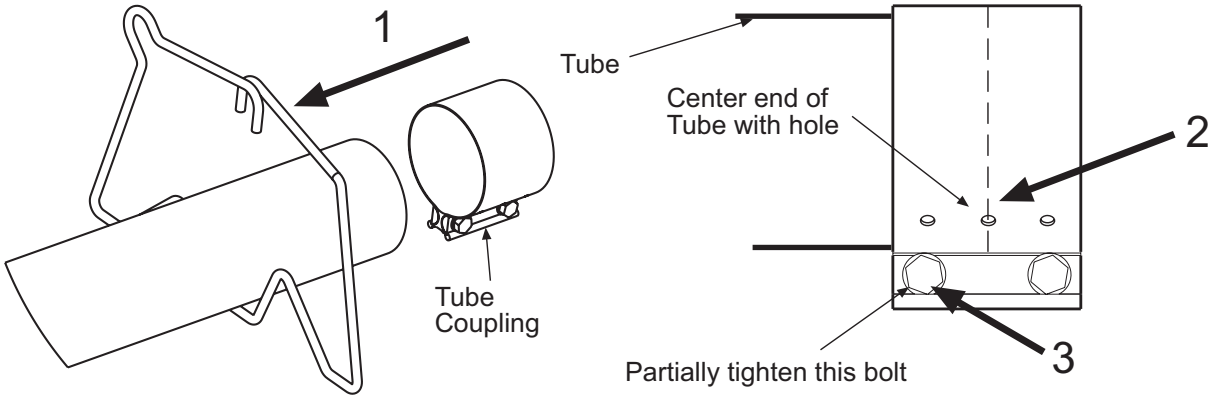

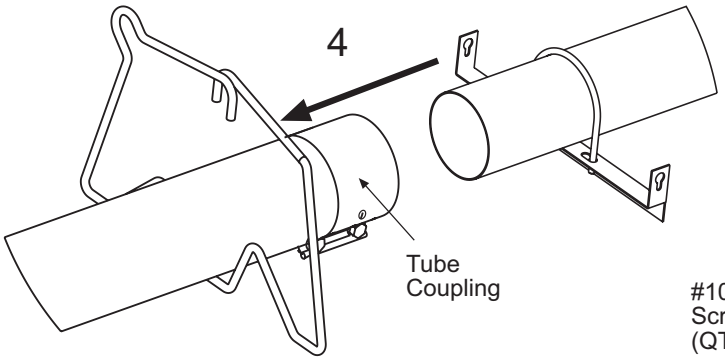

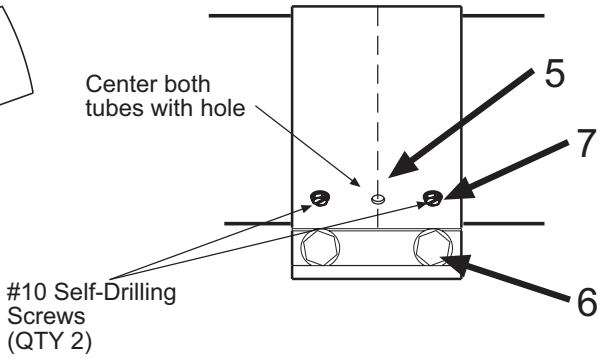

4. Slide the next tube into the coupling.
5. Make sure both tube ends are butted together.
6. Finish tightening both bolts to 40-60 ft.lbs. torque to ensure a complete seal.
7. Use the two Self-drilling screws through the pre-punched holes to secure the tubes in the coupling.

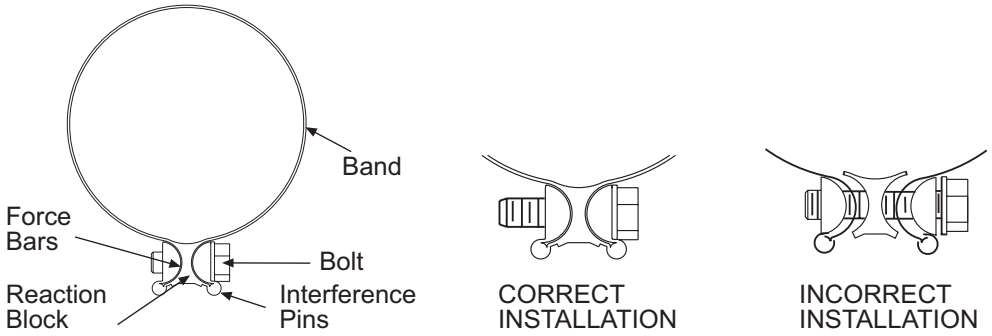

8. Check to ensure that the hardware is completely closed and the band is seated on the reaction block and interference pins as illustrated above.

9. Once all the heater body sections are attached, make sure that the heater system is level. If it is not, slight adjustments can be made using the turnbuckles. (See Section 9.0)

⚠CAUTION

IMPORTANT: NEVER REUSE A COUPLING. Always install a new coupling only and torque as per instructions above and the diagrams above.

10.2) INSERTING TURBULATORS

⚠WARNING

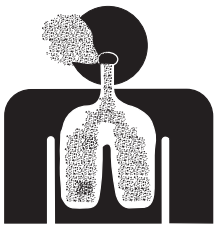

POISONOUS GAS AND SOOT HAZARD

The heater must be assembled with the correct number of turbulator sections and tube length for the rated heat input.

The turbulator must be installed in the last tube section as shown.

Failure to do so may result in death, serious injury, property damage or illness from Carbon Monoxide poisoning.

1. Assemble the turbulators together by interlocking the slotted end portions. Slide these into the last tube section until they are flush with the tube end. Note: Refer to the table below for quantities of turbulators required for each heater model.

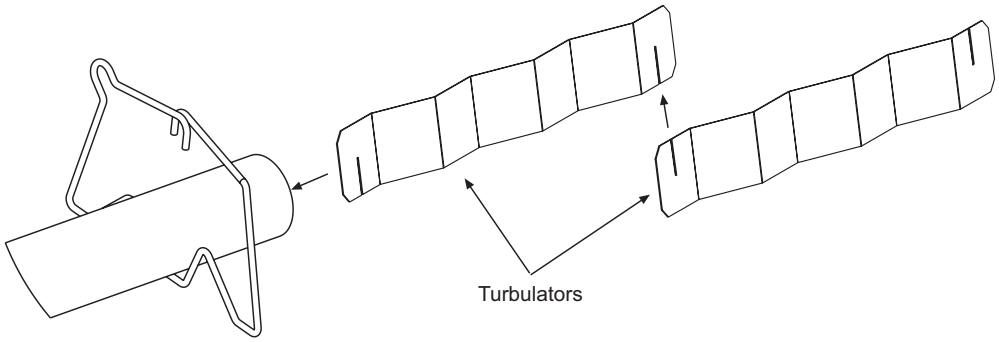

MODEL	2 Ft. Turbulator Sections
PCS/A 75/50	5
PCS/A 100/65	3
PCS/A 125/80	6
PCS/A 150/100	4

10.3) ADDING REFLECTORS

1. Slide the reflectors on the tube support/hanger brackets and through the wire hangers.

2. The tube at the coupling joints must be covered. Slide the reflectors together and provide an overlap of two (2") inches for the first reflector overlap after the control unit. All remaining reflector overlaps will be approximately one (1") inch. This will allow for the natural expansion and contraction of the heater when in operation. ***Note: The heaters can expand and contract up to 1-3/4" of an inch.***

3. Secure the reflectors as shown in Detail A using #10 x 1/2" self-drilling sheet metal screws. This is typical at each tube support/hanger bracket.

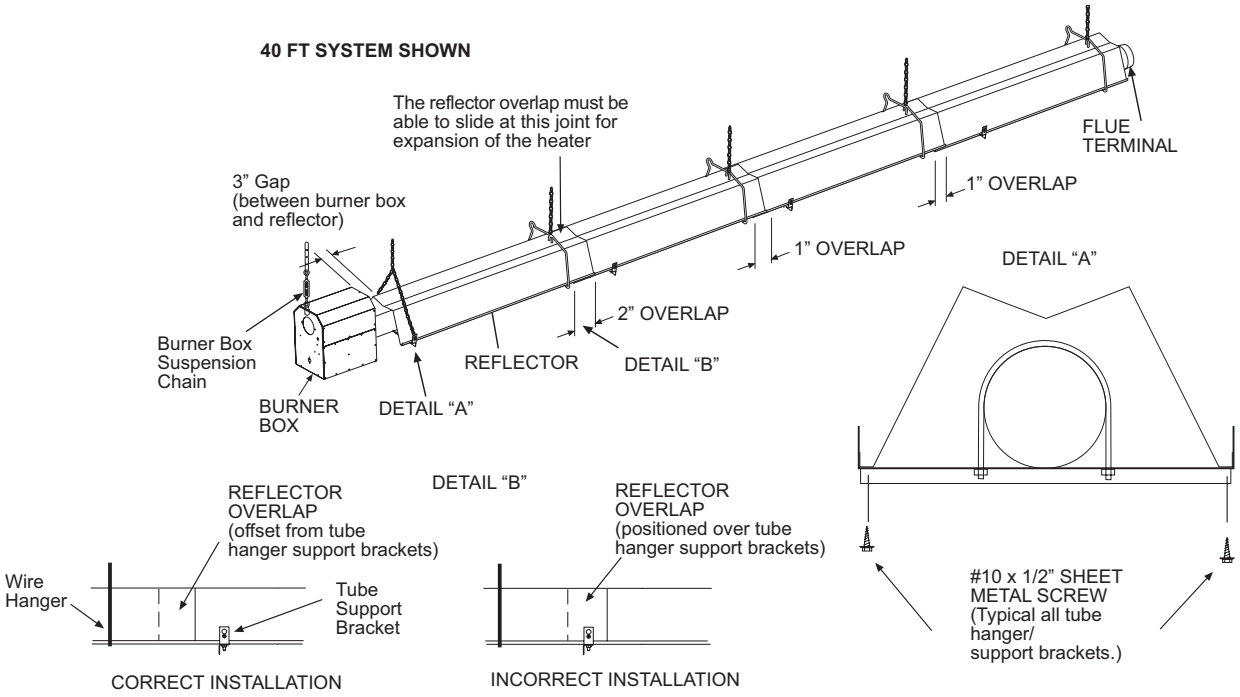

11.0) ADDING OPTIONAL 180° U-Bend (20ft, 40ft and 60ft systems only)

1. Hang body sections parallel with each other. The centerline distance from tube at each body section should be 18" as shown.
2. Join tube ends of body sections and the **U-Bend** together and secure with tube couplings as described in Section 8.

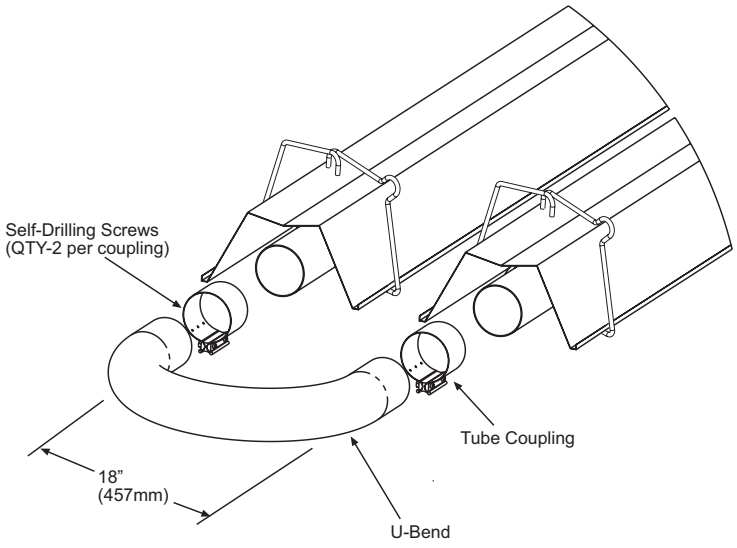

11.1) ADDING OPTIONAL U-BEND REFLECTOR (20ft, 40ft and 60ft systems only)

1. Place the **U-Bend Reflector** over the reflectors of each body section with the end resting next to the tube wire hangers as shown.
2. Slide the speed clips on the reflector edges towards the end of the body section reflectors. Two speed clips are required for each side of the **U-Bend Reflector**. Make sure that the speed clips fit tightly over both the **U-Bend Reflector** and the reflector on each body section. Use two self-drilling screws to permanently secure both sides to the reflectors.
3. Place the **End Reflector** flush with the **U-Bend Reflector** as shown. **Note:** Clearance between end of the **U-Bend Reflector** and the **U-Bend** must be a minimum of 1". Secure by sliding speed clips onto the end reflector edges. Evenly space the speed clips on the sides (two each side) and top (three each) of the reflectors to provide a snug fit.

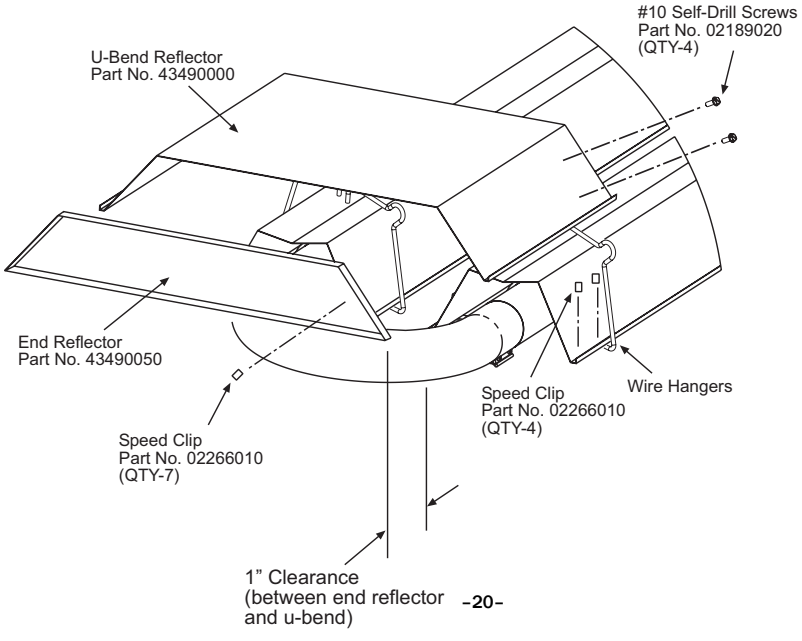

12.0) ATTACHING BURNER BOX ASSEMBLY

1. Attach the burner box and gasket to end of tube flange and secure with 1/4-20 locknuts.
2. Assemble the end reflector flush with the end of the main body reflector. Secure by sliding speed clips onto the reflector edges. Evenly space the speed clips on the sides (one each side) and top (two required) of the reflectors to provide a snug fit. Leave a 3" space between the end reflector and the burner box assembly.
3. The heater can be mounted **horizontally** or at an angle of up to **45 degrees** maximum from horizontal.
4. Burner box must be suspended using the eyebolt provided. Failure to install the box suspension chain will void the manufacturer's warranty.

When angle mounting, the **burner box** unit **must** be positioned ***upright*** as shown below. **FAILURE TO INSTALL THE BURNER BOX IN AN UPRIGHT POSITION WILL VOID THE MANUFACTURER'S WARRANTY.**

⚠ CAUTION

DO NOT lift burner or support it's weight using the TISS wire. It will break under heavy load.

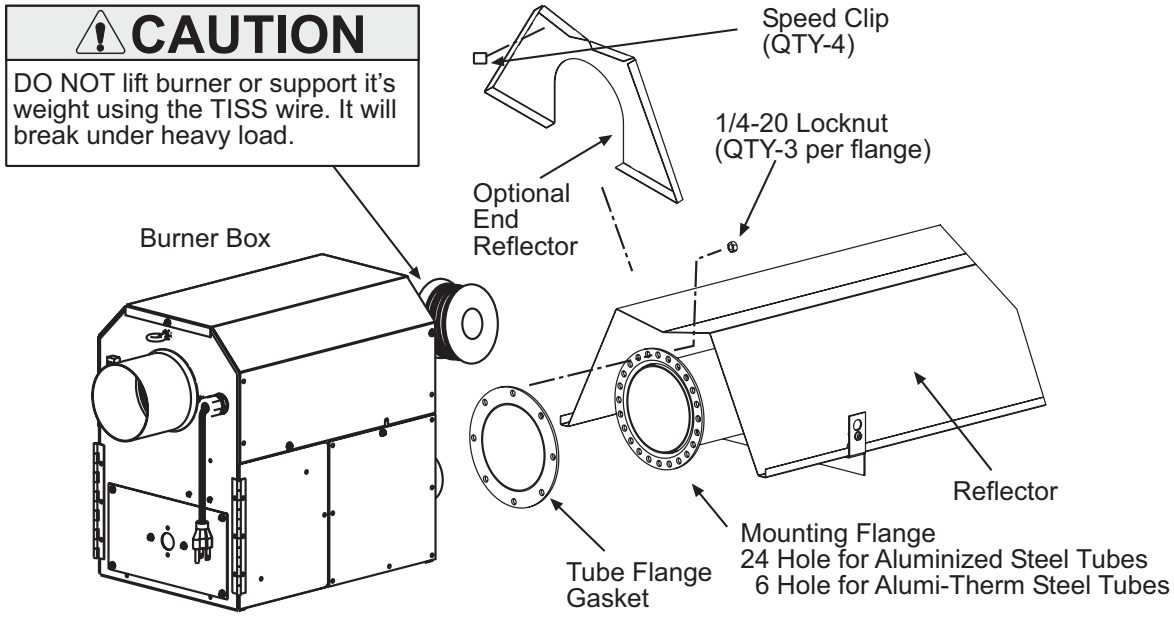

⚠ CAUTION

Failure to install the burner box suspension chain will void manufacturers warranty.

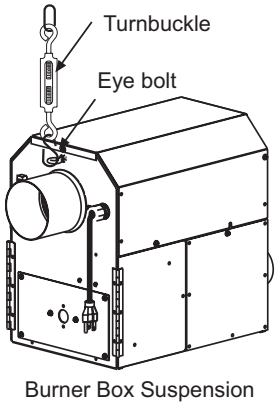

Burner Box Suspension

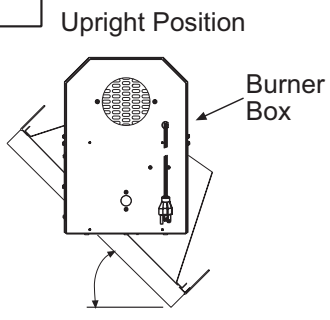

Angle Mounting
Straight Tube Heaters

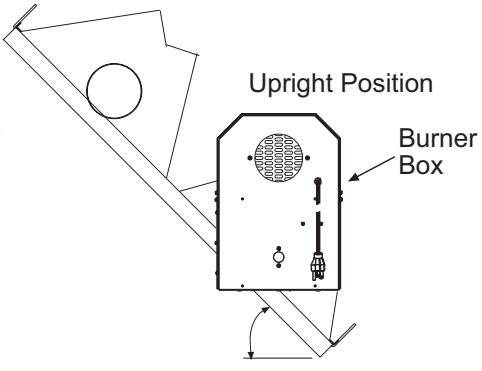

Angle Mounting
U-Tube Heaters

⚠ CAUTION

The burner box weighs 38 lbs. Use caution when handling it.

12.1) CONNECTING THE TISS SYSTEM

Description: The **TISS** ***(Tube Integrity Safety System)*** is designed to shut the main burner off in the event that a burnout occurs in the first 10ft. section of firing tube. **Note:** When replacing the firing tube a new **TISS** wire assembly must also be installed PN 44176010.

Instructions:

1. Make sure that the gap between the burner box and end of reflector is 3" and the reflector is securely attached to the reflector support bracket. Make adjustments if necessary.

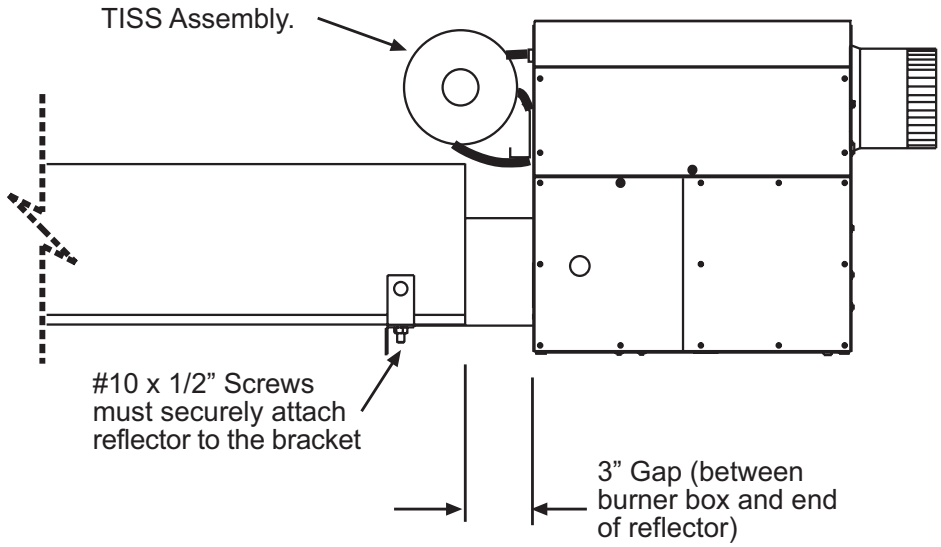

Step 1

2. Un-roll the **TISS** wire assembly from the spool. Be careful not to kink the wires.

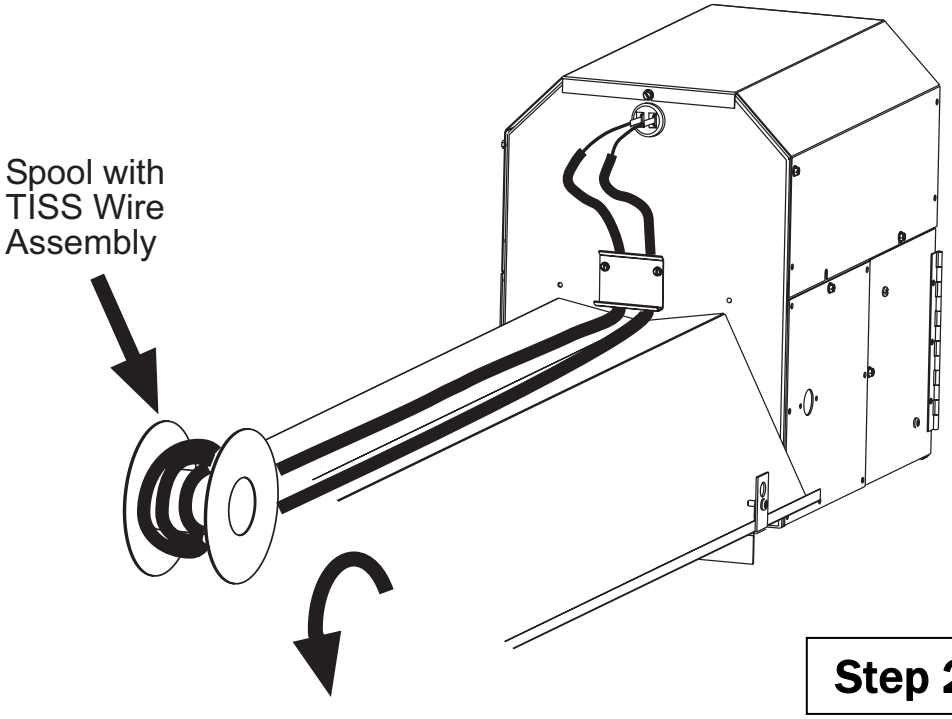

Step 2

3. **Hold the spring retainer clamp and pull the TISS wire assembly to end of reflector at overlap joint. Slide spring retainer clamp over end of reflector as shown.**

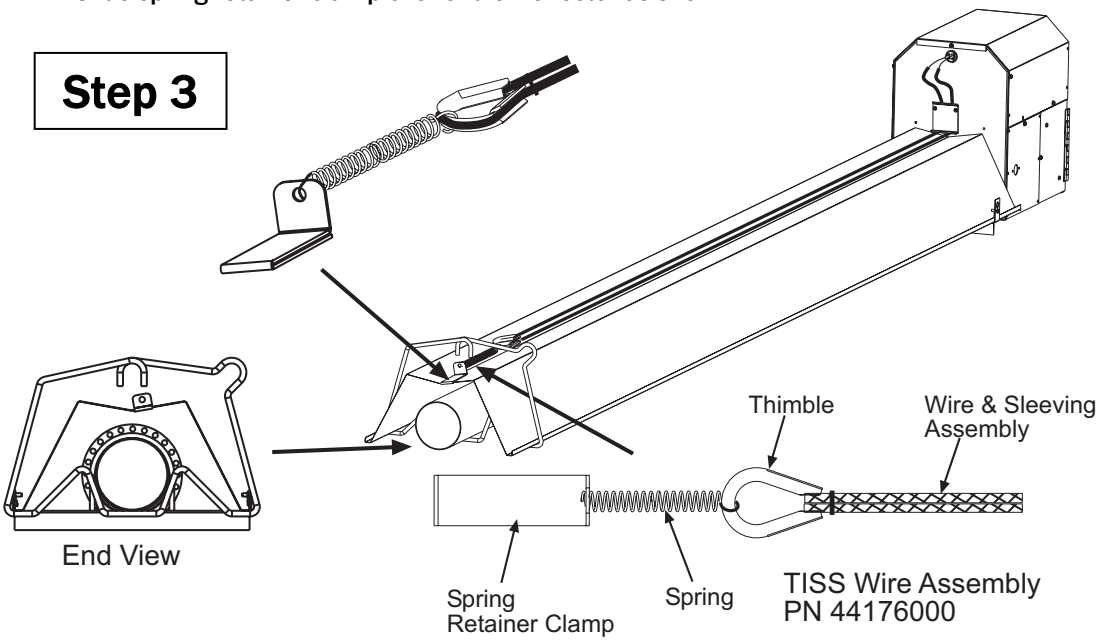

4. **After attachment of the TISS check to make sure that there is sufficient the tension on the wire. Follow the diagram below to increase or decrease the tension as necessary.**

1. Measure the extension of the spring from the end of the reflector to the thimble as shown below.

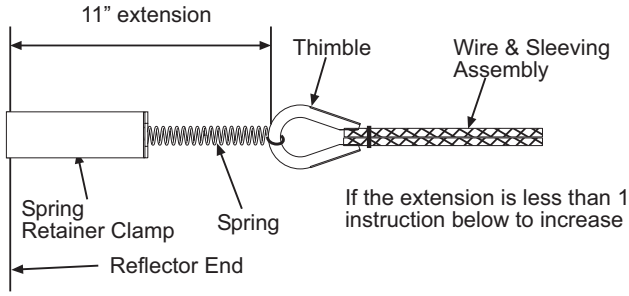

Step 4

If the extension is less than 11" follow the instruction below to increase the extension.

2. Tape one end of the sleeve to the burner box or use a marker.

3. Mark the other end of the sleeve with tape or other marker. Use the top of the retainer as a reference.

4. Loosen screws.

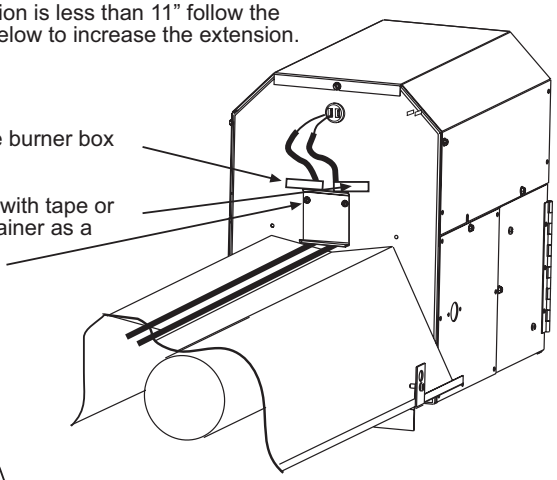

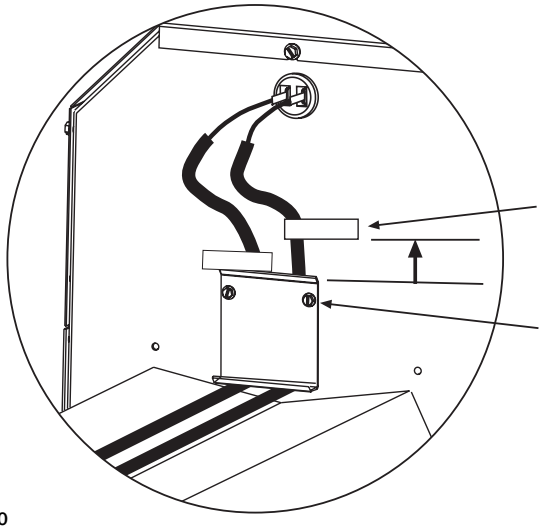

5. Pull one end of the sleeve and wire inside until the marker is raised by the total adjusment length. ie. if the extension is 10" then pull through 1" to increase the exension to 11".

6. Tighten screws.

7. Check extension using the method in step 1.

ANGLE MOUNTED HEATERS ONLY

5. If heaters are to be angle mounted, the TISS wire holder clamp must first be re-positioned as shown using the bottom hole pattern of the clamp. Follow procedures described earlier for all other adjustments.

Step 5

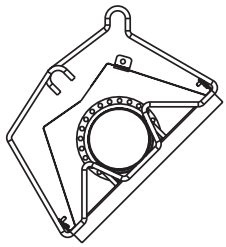

End View

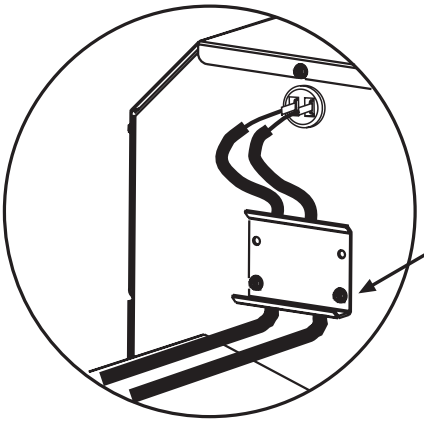

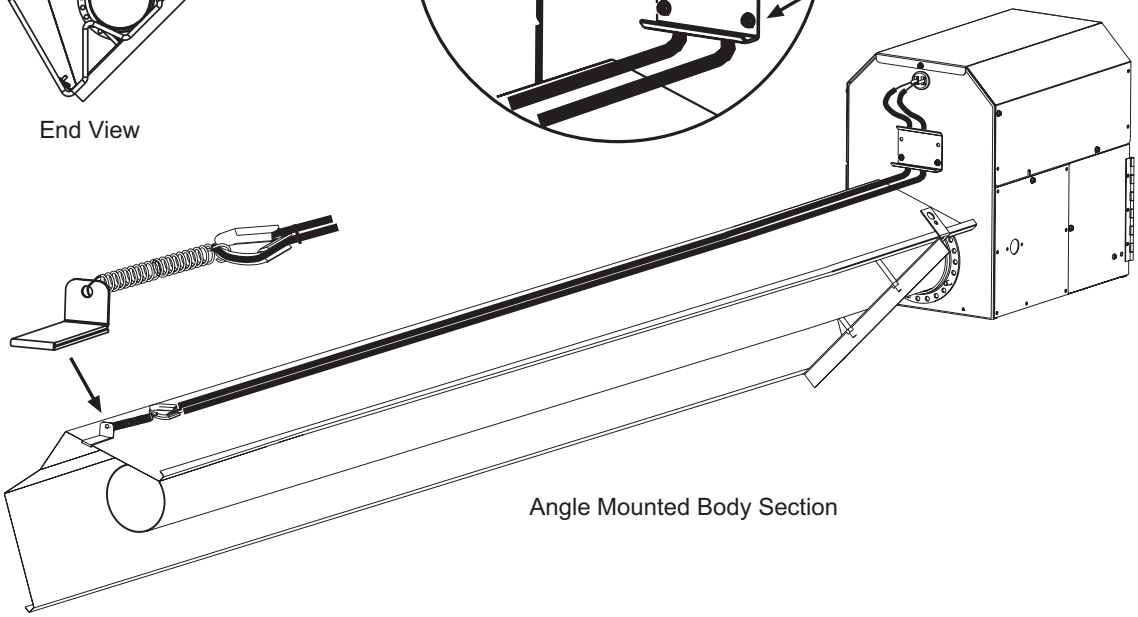

Angle Mounted Body Section

13.0) GAS CONNECTIONS AND REGULATIONS

⚠ WARNING

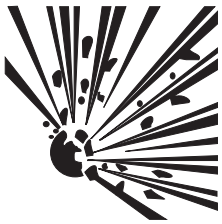

FIRE AND EXPLOSION HAZARD

Tighten flexible gas hose and components securely.

Flexible metal gas hoses must be installed without any twists or kinks in them. The hose will move during operation of the heater and it can crack if it is twisted.

Failure to do so may result in death, serious injury or property damage.

IMPORTANT BEFORE CONNECTING THE GAS TO THE HEATER

1. Connect to the supply tank or manifold in accordance with the latest edition of National Fuel Gas Code (ANSI Z223.1), and local building codes. Authorities having jurisdiction should be consulted before the installation is made. (In Canada, refer to the latest edition of CAN Standard B.149-1 & -2, Installation Codes for Gas Burning Appliances and Equipment.)
2. Check that the gas fuel on the burner rating plate matches the fuel for the application.
3. Check that the gas supply piping has the capacity for the total gas consumption of the heaters and any other equipment connected to the line.
4. Check that the calculated supply pressure with all gas appliances and heaters operating will not drop below the minimum supply pressure required for these heaters. Check inlet supply pressures on page 25.
5. All gas supply lines must be located in accordance with the required clearances to combustibles from the heater as listed on the clearances label of the heater and Section 4 of this manual.
6. Pipe joint compounds must be resistant to the action of liquefied petroleum gases.
7. Tube heaters will expand/contract during operation. Where local codes do not prohibit, a CSA or U.L. approved flexible connector supplied with this heater is required for connections between the rigid piping and the heater. A union and an approved shut off valve should be installed before the burner box inlet. The shut off valve should be installed within 6 feet of the union.
8. The gas pipe, flexible hose and connections must be self supporting. The gas pipe work must not bear any of the weight of the heater or any other suspended assembly.
9. This appliance is equipped with a step-opening, combination gas valve. **The maximum supply pressure to the appliance is 14" W.C. or 1/2 P.S.I.** If the line pressure is more than the maximum supply pressure, then a second stage regulator which corresponds to the supply pressure must be used.
10. After all gas connections have been made, make sure the heater and all gas outlets are turned off before the main gas supply is turned on slowly. Turn the gas supply pressure on and check for leaks. To check for leaks, check by one of the methods listed in Appendix D of the National Fuel Gas Code.
11. If a 2nd stage regulator is used, the ball valve down stream in the supply line must be closed when purging the gas lines to prevent gas seeping through it. If initial gas pressure is higher than 14" w.c. the redundant combination gas valve is designed to lock out. Pressure build-up in the supply lines prior to the heater must be released before proper heater operation.

⚠ WARNING **DO NOT USE AN OPEN FLAME OF ANY KIND TO TEST FOR LEAKS.**

KEY DIMENSIONS AND COMPONENTS OF THE GAS CONNECTIONS

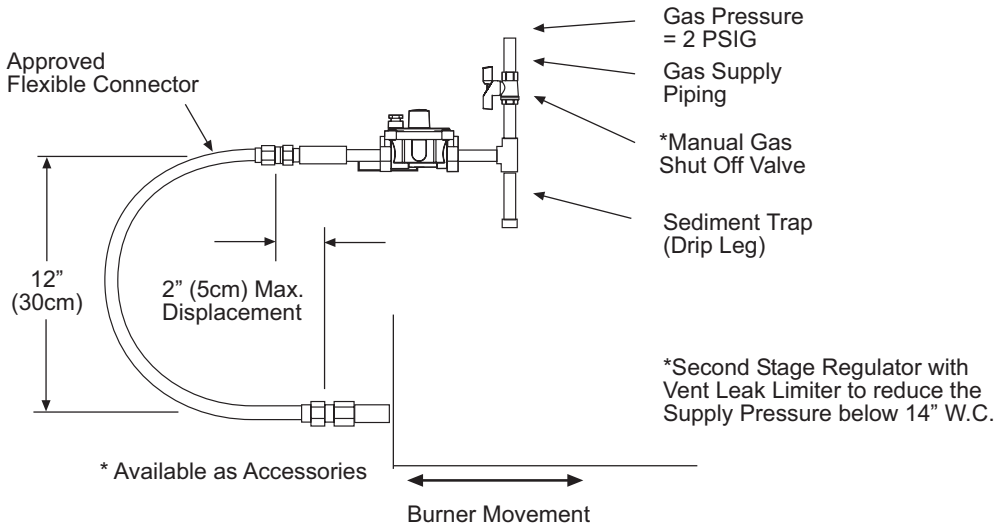

RECOMMENDED GAS CONNECTION POSITIONS WITH 36” FLEXIBLE GAS HOSE

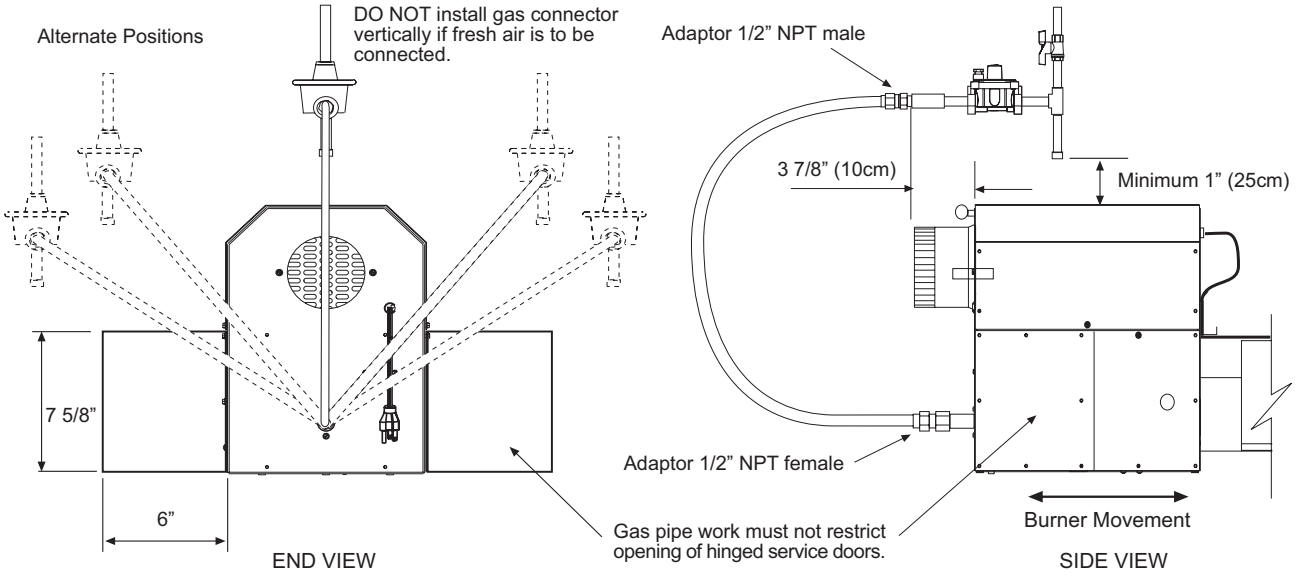

Gas connectors supplied with the heater must be installed as shown, in one plane, and without sharp bends, kinks or twists.

INCORRECT POSITIONS

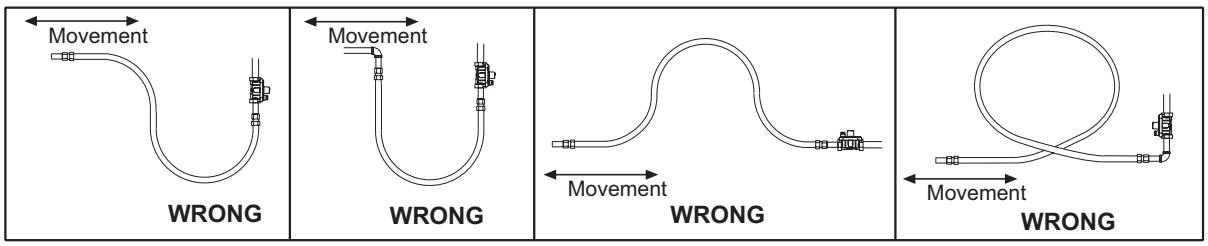

14.0) INSTRUCTIONS FOR PRESSURE TEST GAUGE CONNECTION

⚠ WARNING

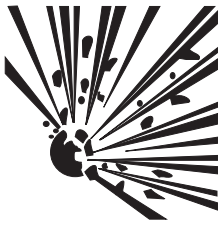

FIRE AND EXPLOSION HAZARD

Never operate the heater with the access panel open or removed.

The access panels must be closed tightly with all the necessary screws during operation.

Failure to do so may result in death, serious injury or property damage.

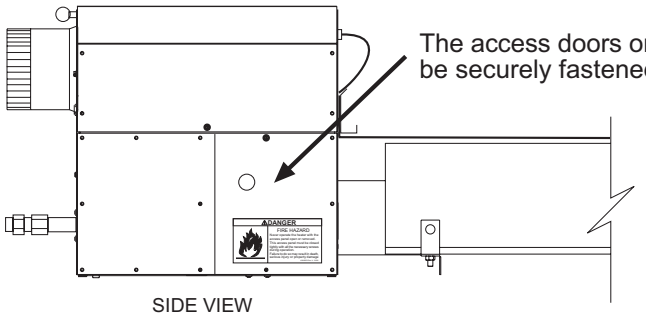

The access doors on either side of the burner must be securely fastened before operating the heater.

SIDE VIEW

SUPPLY PRESSURE

1. The installer will provide a 1/8" N.P.T. tapped plug, accessible for test gauge connection immediately upstream of the gas supply connection to the heater.

MANIFOLD PRESSURE– COMBINATION GAS VALVE IS FACTORY SET

1. Turn the gas valve to the "OFF" position. Remove the 1/8" plug from the combination gas valve at the outlet pressure tap and connect a 1/8" nipple to the tapped hole. Connect the test gauge to the nipple. Turn on the gas supply.
2. Set the heater to operate on high. With the main burner operating, check the full rate (high) burner manifold pressure using a water manometer. Gauges that measure pressure in pounds per square inch are not accurate enough to measure or set the manifold pressure. All measurements **MUST BE** made when this heater and all other gas burning equipment that are connected to the gas supply system are operating at maximum capacity.
3. **The combination gas valve is factory set and should not require adjustment.** If high pressure adjustment is required, remove the pressure regulator adjustment cap. Using a 3/32" hex Allen wrench, turn the inner adjustment screw for HI pressure clockwise ↻ to increase or counterclockwise ↺ to decrease the gas pressure to the burner.
4. After high pressure has been checked, check low pressure regulation.
5. Using a 3/32" hex Allen wrench, turn the inner adjustment screw for LO pressure clockwise ↻ to increase or counterclockwise ↺ to decrease the gas pressure to the burner.
6. Once high and low pressures have been checked and adjusted, replace pressure regulator adjustment cap.

Gas pressures are shown in the table below.

GAS PRESSURE TABLE

GAS TYPE	MANIFOLD PRESSURE		SUPPLY PRESSURE	
	High	Low	Minimum*	Maximum
Natural Gas	3.5" W.C.	1.4" W.C.	5" W.C.	14" W.C.
Propane Gas	10.0" W.C.	4.0" W.C.	11" W.C.	14" W.C.

* Minimum permissible gas supply pressure for purpose of input adjustment.

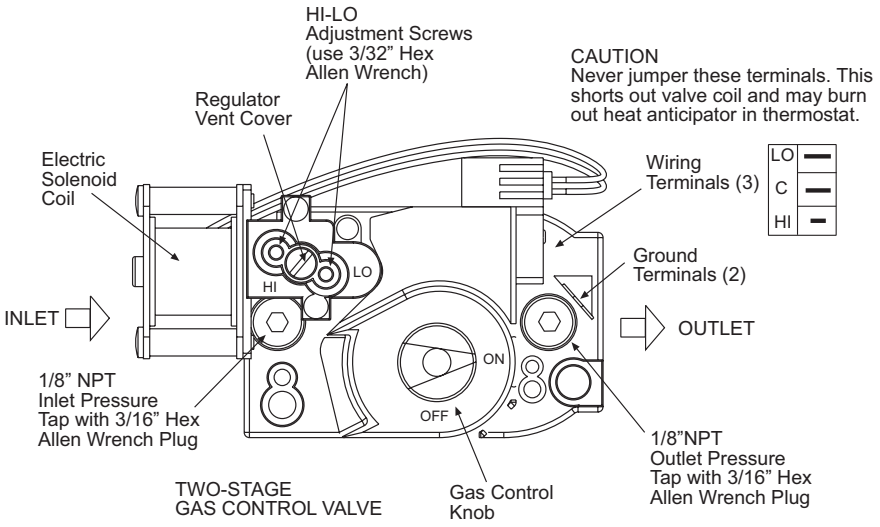

15.0) ELECTRICAL CONNECTIONS

⚠ WARNING

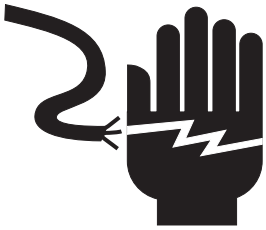

ELECTRIC SHOCK HAZARD

Disconnect electrical power and gas supply before servicing.

This appliance must be connected to a properly grounded electrical source.

Failure to do so may result in death or serious injury.

1. All electric wiring shall conform to the latest edition of the National Electrical Code (ANSI/NFPA No. 70), or the code legally authorized in the locality where the installation is made.
2. The unit must be electrically grounded in accordance with the National Electrical Code (ANSI/NFPA No. 70-latest edition). In Canada, refer to current standard C22.1 Canadian Electrical Code Part 1.
3. The wiring providing power to the heater shall be connected to a permanently live electrical circuit, one that is not controlled by a light switch.
4. The power supply to the unit should be protected with a fused disconnect switch or circuit breaker. A service switch, as required by local codes, shall be located in the vicinity of the heater (check local codes for allowable distances) and should be identified as Heater Service Switch. All electrical wiring must be located in accordance with the required Clearances to Combustibles from the heater as listed on the nameplate on the heater.
5. Connection to the power supply is provided by a 18/3 gauge x 72" long cord with grounded 3 prong plug.
6. The post purge function of the burner (fan on for 30 seconds after the call for heat) will only be enabled when using a 24 Volt thermostat. With the line Voltage thermostat post purge operation is disabled.

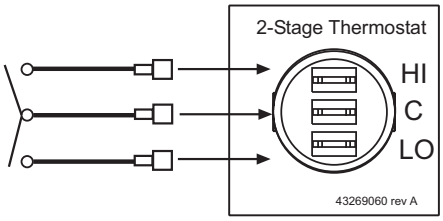

The two stage heater terminals must only be supplied with 24V

24V 2 stage thermostat connection

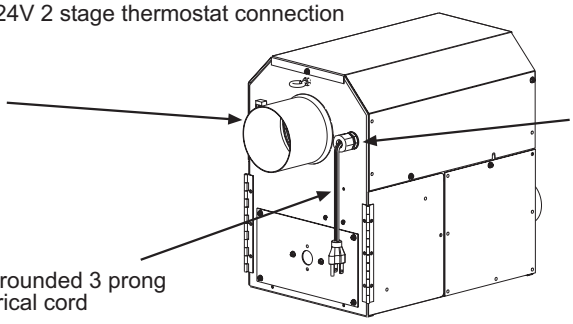

Liquid tight fitting must be tight to prevent ingress of moisture

72" grounded 3 prong electrical cord

INTERNAL CONNECTION WIRING DIAGRAM — Direct Spark Ignition

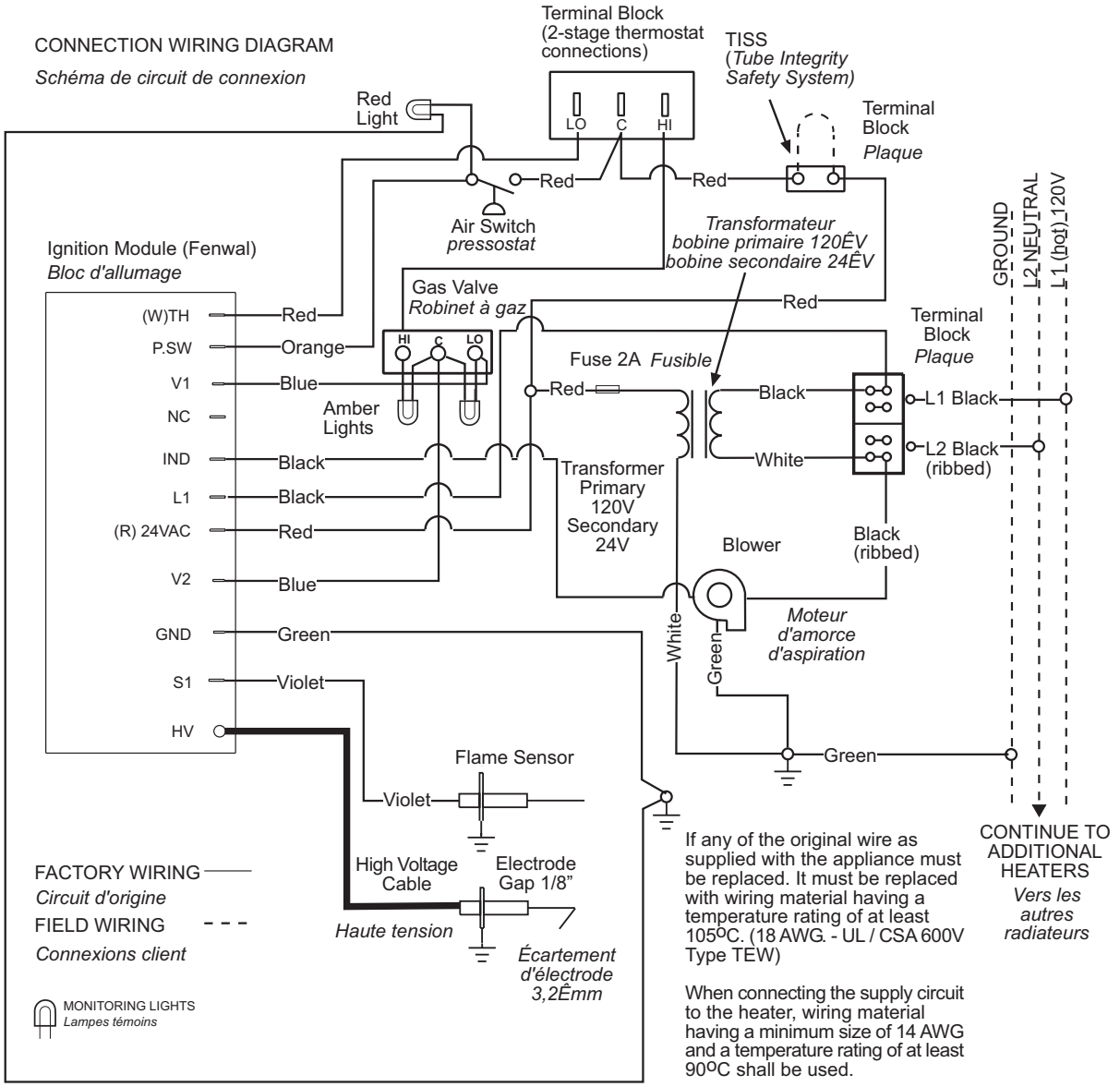

IGNITION MODULE TERMINAL DESIGNATIONS	
24VAC/R	**24 VAC Supply to Module**
TH/W	**Thermostat Input**
PS/W	**Pressure Switch Input**
GND	**System Ground**
V1	**Valve Power**
V2	**Valve Ground**
L1	**120/240 VAC Input (Hot)**
IND	**Blower Output**
NC	**Alarm (if equipped)**
S1	**Remote Flame Sensor**

NOTES:

1. If any of the original wire as supplied with the appliance must be replaced, it must be replaced with wiring material having a temperature rating of at least 105ºC. (18 Ga. CSA 600V Type TEW)
2. When connecting the supply circuit to the heater, wiring material having a minimum size of 14 AWG and a temperature rating of at least 90ºC shall be used.

FIELD CONNECTION WIRING DIAGRAMS

A. LOW VOLTAGE (24V) THERMOSTAT CONNECTIONS – SINGLE HEATER

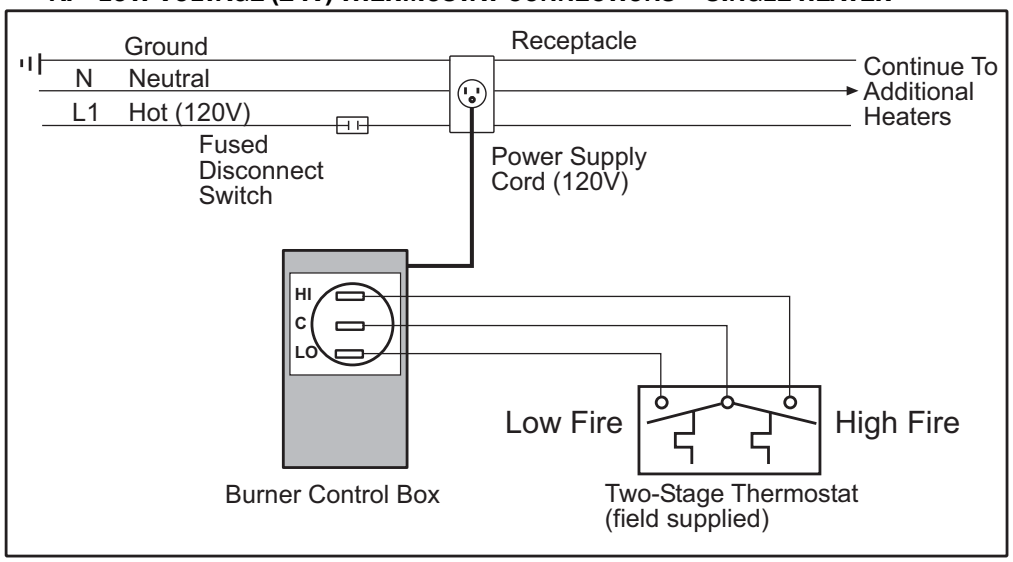

B. LOW VOLTAGE (24V) THERMOSTAT CONNECTIONS – MULTIPLE HEATERS

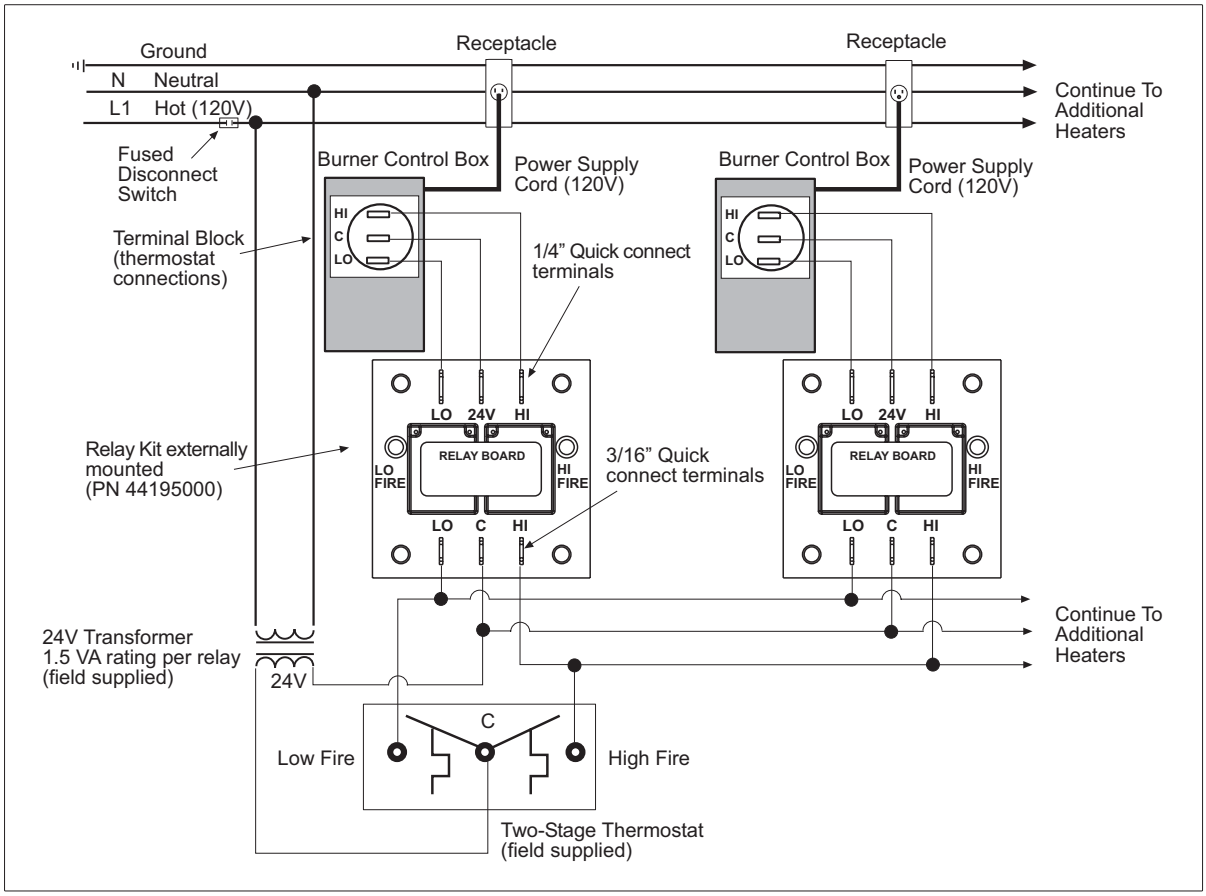

16.0) VENTING

⚠ WARNING

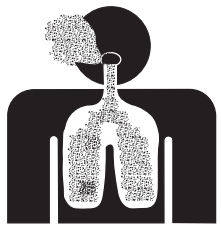

CARBON MONOXIDE HAZARD

Heaters installed unvented must be installed in an area with least 4 CFM per 1,000 Btu of unvented heaters.

In buildings with airborne contamination such as poultry houses the heater must be installed with fresh air for combustion.

Failure to do so may result in death or serious injury or illness from Carbon Monoxide poisoning.

A. BASIC FLUE VENTING — Venting must comply with the latest edition of the National Fuel Gas Code (ANSI Z223.1-latest edition) or the authority having jurisdiction. Other venting references are in the equipment volume of the ASHRAE Handbook.

Model	Heat exchanger length ft	Maximum vent length ft	Maximum Fresh air intake length ft	Max. combination of fresh air and vent ft.
PCA/S 75/50	20	60	50	75
PCA/S 75/50	30	50	50	65
PCA/S 100/65	30	60	50	75
PCA/S 100/65	40	50	50	65
PCA/S 125/80	30	70	50	85
PCA/S 125/80	40	60	50	75
PCA/S 125/80	50	50	50	65
PCA/S 150/100	40	70	50	85
PCA/S 150/100	50	60	50	75
PCA/S 150/100	60	50	50	65

Note: Vent cannot be used with the Cold air stopper accessory.
Note: Cold air stopper only for use with fresh air intake assembly PN 44129500.
Note: All lengths given above are for 4 inch diameter vent pipe.

SINGLE HEATER VENTING (VERTICAL THROUGH THE ROOF)

1. When venting the heater to outside of building through a roof, use single-wall metal pipe. This is to be constructed of galvanized sheet metal or other approved noncombustible corrosion-resistant material as allowed by state or local codes.
2. A vent passing through a combustible roof shall extend through an approved clearance roof thimble. Double-wall, Type B vent must be used for the portion of the vent system which passes through the roof. An approved vent cap (Leslie "VersaCap"-Type B or equal) must be attached to end of the flue.
3. The maximum equivalent length of vent pipe should be carefully observed. A safety switch in the heater is designed to shut the heater off before excessive flue restriction causes bad combustion. Refer to the Vent Sizing Table for maximum vent lengths and vent pipe diameter.
4. Joints between sections of piping shall be fastened by sheet metal screws or other approved means and should be sealed to prevent leakage of flue gas into building. Aluminum or Teflon tape suitable for 550°F (3M Company tapes 433 or 363) or silicone sealant is recommended.
5. All portions of the vent pipe shall be supported to prevent from sagging (6' spacing is recommended).
6. When the vent pipe passes through areas where the ambient temperature is likely to induce condensation of the flue gases, the vent pipe should be insulated and a condensation drain should be provided.
7. Minimum clearance for single-wall flue pipe to combustible material shall be 6 inches. This may be reduced when the combustible material is protected as specified in the National Fuel Gas Code or the authority having jurisdiction.

8. Single-wall metal pipe shall not originate in any unoccupied attic or concealed space and shall not pass through any attic, inside wall or concealed space, or through any floor. For the installation of a single-wall metal pipe through an exterior combustible wall, refer to latest edition of the National Fuel Gas Code or the authority having jurisdiction.
9. A venting system shall terminate at least 3 ft. above any forced air inlet located within 10 ft.

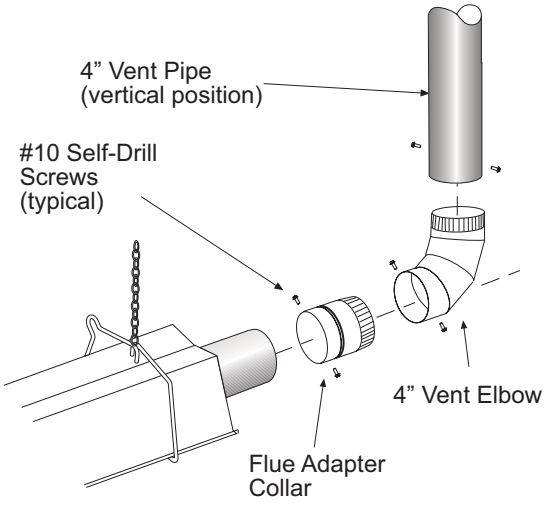

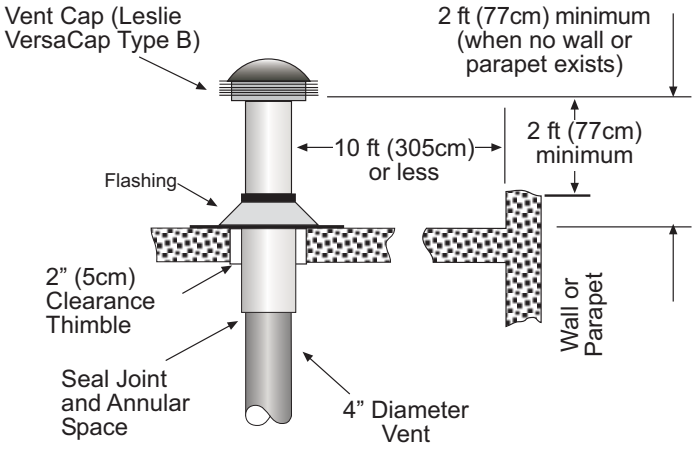

SINGLE HEATER VENTING (HORIZONTAL THROUGH SIDEWALL)

When venting the heater horizontally through a combustible outside sidewall, the same requirements listed previously for venting **Vertical Through The Roof** apply *except* as follows:

1. A vent passing through a combustible wall must pass through an approved clearance thimble (Air-Jet #4VT or Ameri-Vent #4EWT or other thimbles that are listed by a nationally recognized testing agency.
2. An approved vent cap (Breidert-Type L or equal) must be attached to the end of the vent pipe.

NOTE: To minimize problems associated with condensation in long horizontal runs, vent pipe can be insulated.

3. Use the following correction factors to obtain the equivalent length when elbows are used:
   c. Subtract 10 ft. for each elbow beyond 15 ft. from the heater.
   d. Subtract 15 ft. for each elbow within 15 ft. of the heater.
4. Limit to (2) 90° elbows in the vent system.
5. When venting through a sidewall, the horizontal vent pipe shall fall not less than 1/2 inch per 20 feet from the start of the vent system to the vent terminal. All portions of the vent pipe shall be supported to prevent sagging. (6' spacing is recommended)
6. A minimum clearance of 6 inches must be maintained between the outside wall and vent cap.
7. The horizontal venting system shall not terminate:
   a. Less than 4 ft. (1.2m) below, 4 ft. (1.2m) horizontally from or 1 ft. (30cm) above any door, operable window or gravity air inlet into any building. The bottom of the vent terminal shall be located at least 7 ft. (2.1m) above grade or above snow accumulation level as determined by local codes.
   b. Less than 3 ft. (0.9m) from a combustion air inlet.
   c. Less than 3 ft. (0.9m) from any other building opening or any gas service regulator.
   d. Less than 7 ft. (2.1m) above public walkways.
   e. Directly over areas where condensate or vapor could create a nuisance or hazard or be harmful to the operation of gas utility meters, regulators, relief valves, or other equipment. Building materials should be protected from flue gases and condensate.
   f. Less than 18" (0.45m) when directly below a combustible overhang.
8. In regions of the country where prevailing winds are consistently higher than 40 mph, it may be necessary to terminate the vent system above the roof level.

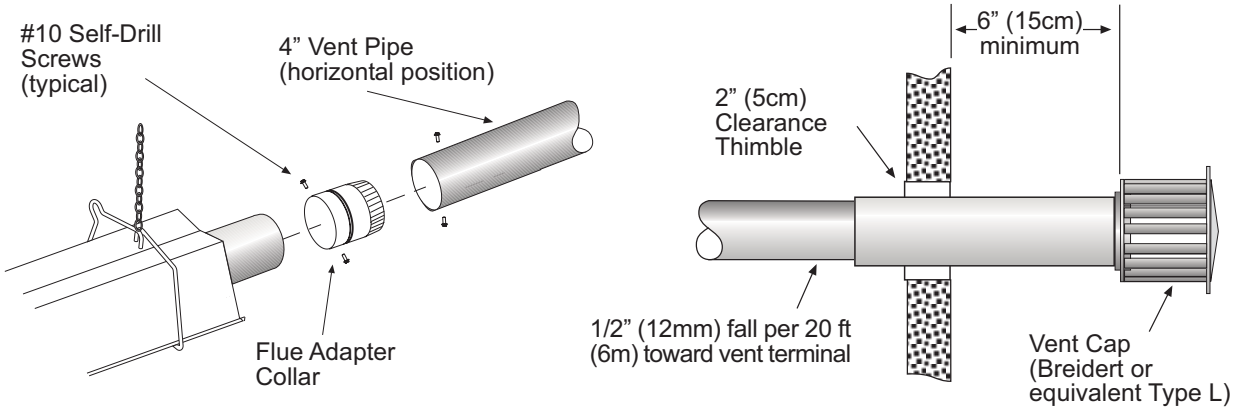

B. INDIRECT VENTING (UNVENTED HEATERS) — This heater requires ventilation in the building to dilute the products of combustion and provide fresh air for efficient combustion. Where unvented heaters are used, gravity or mechanical means shall be provided to supply and exhaust at least 4 CFM per 1,000 Btu/hr input of installed heaters. Exhaust vents must be located at the highest point above and in the vicinity of the heaters, and the inlet vents must be located below the level of the heaters. An exhaust hood (Part #42924000) must be placed on the flue adapter collar located on the end of the last body section when used unvented and **must be mounted only in a downward position as shown below.**

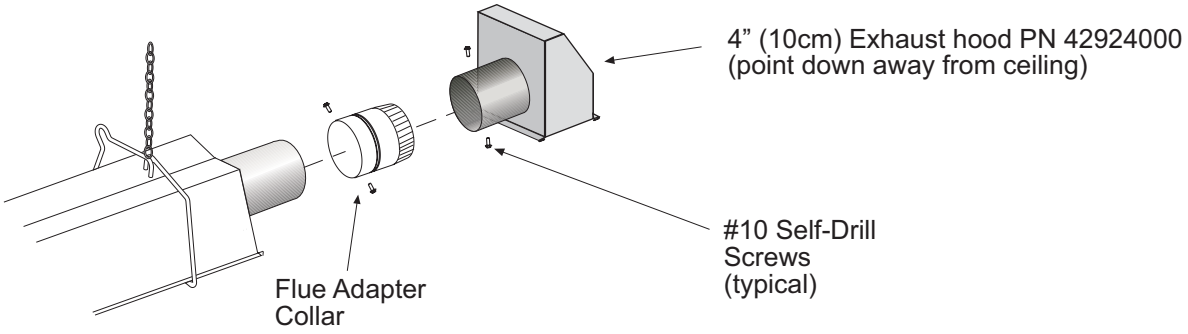

17.0) AIR FOR COMBUSTION

Fresh air for combustion must be provided in buildings where there are airborne contaminants such as poultry houses.

If indoor combustion air is to be supplied for a tightly enclosed area, one square inch of free area opening shall be provided below the heater for each 1,000 Btu/hr of heater input. Adequate clearances around the air inlet screen must be maintained at all times. In larger open areas of buildings, infiltration normally is adequate to provide air for combustion.

17.1) DIRECT OUTSIDE AIR FOR COMBUSTION (Horizontal Through a Sidewall)

Outside combustion air should be supplied directly to the heater when the building is subject to negative pressure, contaminants or high humidity are present in the building air. These contaminants include paints, solvents, corrosive vapors or any other foreign particles that may cause damage to the heater or result in poor combustion.

Outside combustion air can be brought directly to the heater by a 4" diameter duct (field supplied) less than 20 ft. long or equivalent. An approved vent cap and 4" flexible hose (supplied in accessory Kit #44129510) must be connected to the duct as shown below. Connect the 4" flexible hose directly to the 4" starting collar (supplied with heater). This is used to allow for expansion/contraction of straight tube heaters.

The combustion air inlet should be a minimum of 3 ft. (0.9m) from the flue vent termination. The air intake terminal must be located not less than 1 ft. (30cm) above grade. It is good installation practice to supply combustion air from the same pressure zone as the vent outlet. Avoid bringing combustion air to the heater from an attic space. There is no guarantee that adequate combustion air will be supplied.

Flexible Air Intake Hose

Insure that the Air Intake Hose connection is not too tight between the control box and the Air Intake. The air intake hose can become disconnected as the heater expands and contracts during operation.

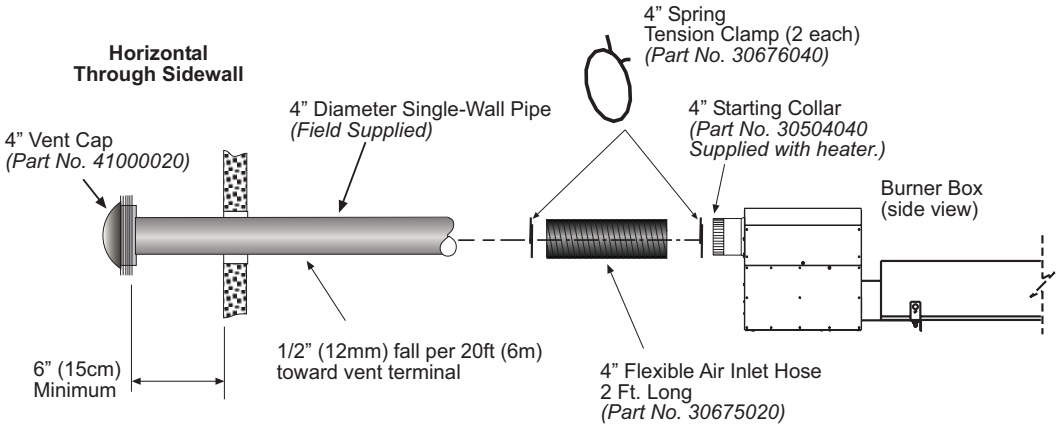

Instructions:

Step A.	Cut hole in side wall approximately 4-1/4" diameter.
Step B.	Slide 4" diameter pipe through as shown. Install vent cap furnished with kit. Seal around pipe at hole opening using silicone.
Step C.	Compress one end of flexible hose. Squeeze ears of spring clamp and slide over compressed end of hose. Repeat for opposite end of hose.
Step D.	Slide one end of hose and clamp onto starting collar of control.
Step E.	Slide opposite end of hose and clamp onto 4" diameter fresh air inlet pipe.

Note: A cold air stopper is not used with fresh air intake through a sidewall.

17.2) AIR FOR COMBUSTION (Through Ceiling)

If the heater is installed less than 2 ft. from the ceiling, a flexible transition section must be used to allow for expansion/contraction of straight tube heaters. Install the fresh air intake assembly (supplied in accessory Kit no. 44129500) shown below.

In colder climates, where necessary, insulate the outside combustion air duct. Avoid locating the outside combustion air duct directly above the burner box. Provide a capped cleanout T as necessary.

The **Cold Air Stopper** (supplied as accessory for models **PCS 75, 100** and **125** only) is installed into the combustion air inlet duct and is used to prevent cold air from entering the burner box during periods where the burner and draft inducer are off.

Flexible Air Intake Hose

Insure that the Air Intake Hose connection is not too tight between the burner box and the air intake. The air intake hose can become disconnected as the heater expands and contracts during operation.

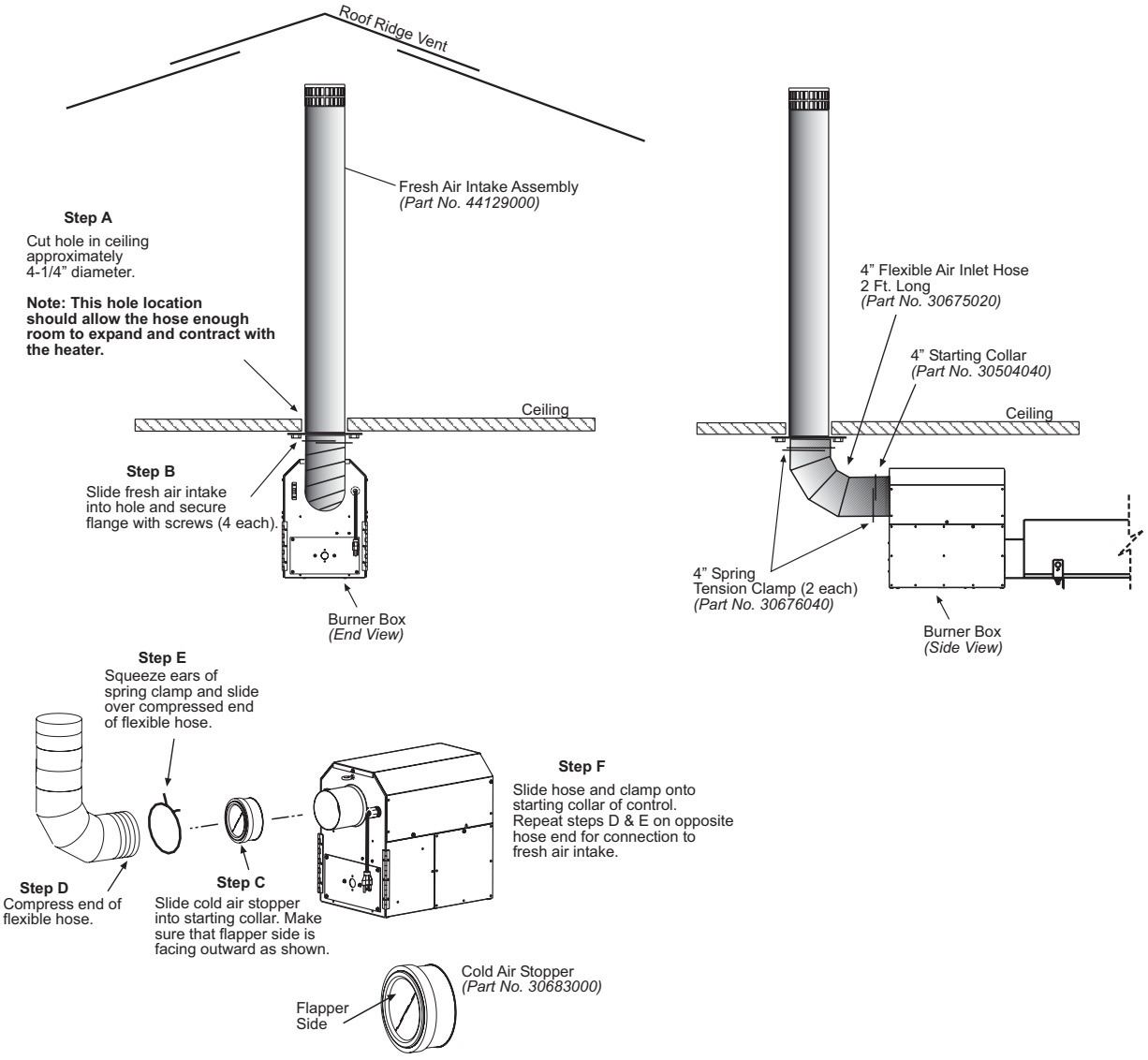

18.0) LIGHTING AND SHUTDOWN INSTRUCTIONS

⚠ WARNING

FIRE AND EXPLOSION HAZARD

Never operate the heater with the access panel open or removed.

The access panels must be closed tightly with all the necessary screws during operation.

Failure to do so may result in death, serious injury or property damage.

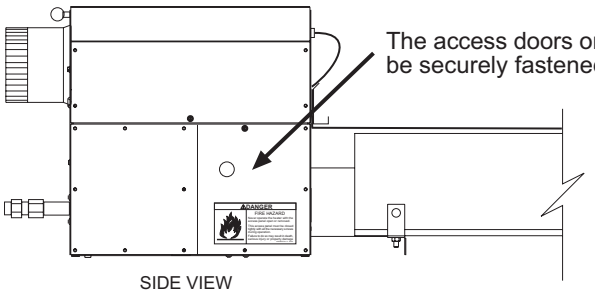

1) Turn on the gas and electrical supply. Rotate the gas valve knob counter-clockwise to the **"ON"** position.
2) Set the thermostat to call for heat. The blower motor will energize.
3) Ignition should occur after the 15-second pre-purge.
4) If the burner fails to light, or flame is not detected during the first trial for ignition (a period of approximately 15 seconds) the gas valve is de-energized and the control goes through an inter-purge delay of approximately 60 seconds before another ignition attempt. The control will attempt two additional ignition trials before going into lockout, and the valve relay will be de-energized immediately. The blower will be turned off following a post-purge period of approximately 30 seconds.
5) If the heater does not light, manually reset the thermostat or shut off power completely for 5 minutes before attempting to relight.
6) To permanently shut down the heater, rotate the gas valve knob clockwise to the **"OFF"** position and turn off the gas and electrical supply.

***NOTE*: THE LIGHTING AND SHUTDOWN INSTRUCTIONS ARE ALSO SHOWN ON THE PERMANENT NAMEPLATE LABEL ATTACHED TO THE HEATER.**

19.0) SEQUENCE OF OPERATION

The chart below shows the sequence of operation for the normal operating cycle of the PCS/PCA when connected to a permanent 120V power supply and the heater is turned on and off by a remote 24V thermostat. (Electrical connection diagram C).
Note[1]: When the PCS/PCA is operated by a thermostat interrupting the line voltage (120V) to the heater then the post purge function is disabled.

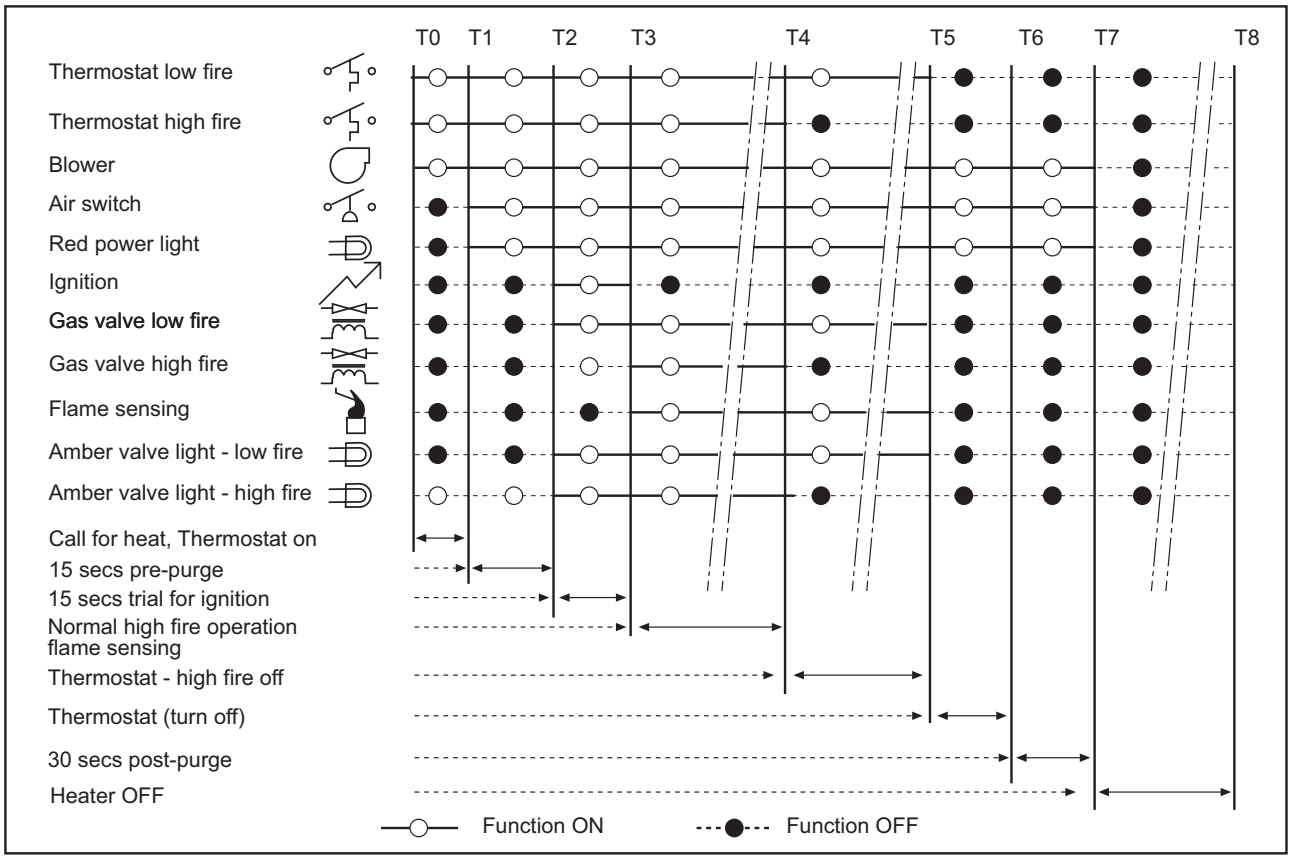

If the flame is not sensed during sequence T3 then the burner will automatically begin re-ignition sequence T2. The ignition sequence will be repeated three times with a 60 second inter-purge. If the flame is not re-established the heater will go to lockout.

20.0) BURNER COMPONENT LOCATIONS

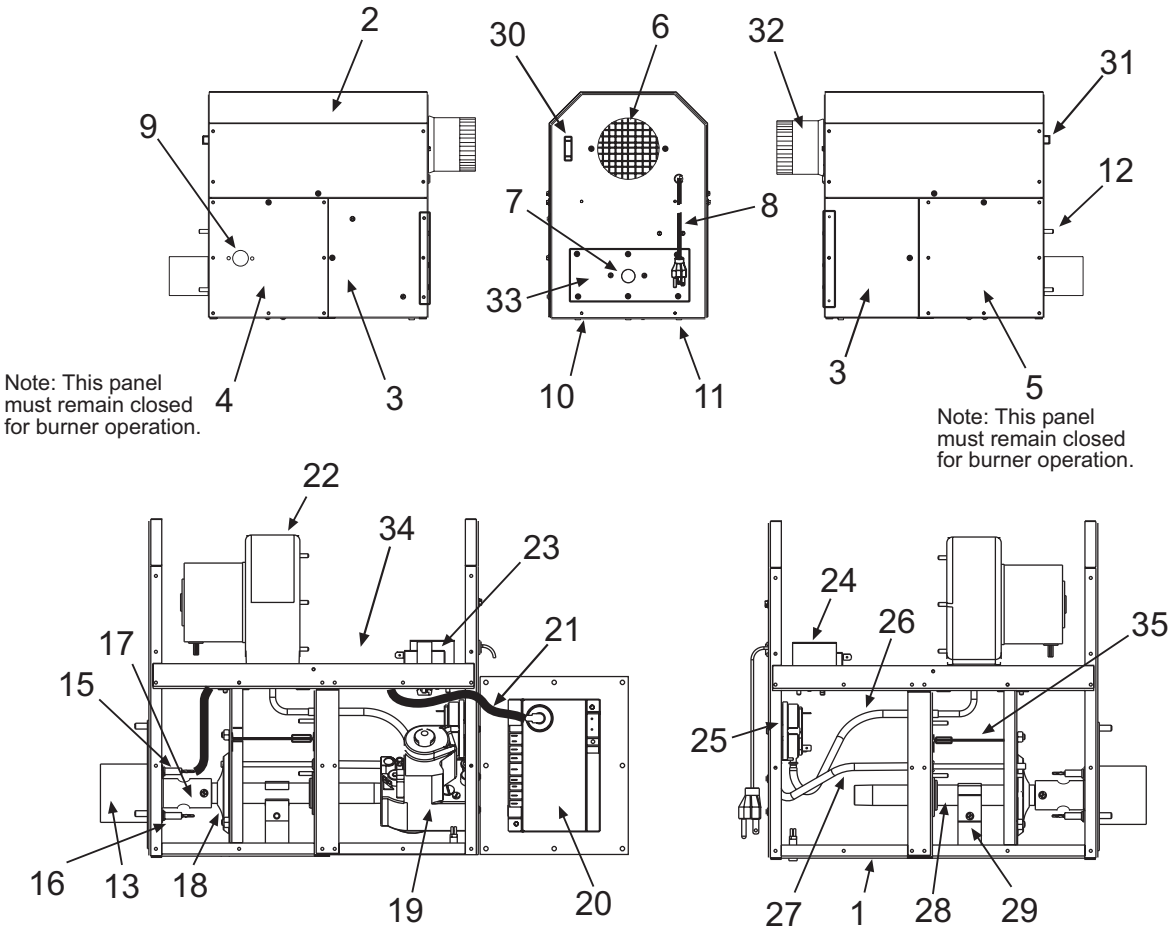

Legend:

1	Cabinet Assembly	19	Gas Control Valve
2	Access Panel - Top	20	Ignition Module
3	Access Panel - Hinged (2 ea)	21	Ignition Cable
4	Access Panel - LH Burner	22	Blower Assembly
5	Access Panel - RH Burner	23	Transformer - 120/24 VAC
6	Air Inlet Screen	24	Terminal Block/Fishpaper Shield
7	Gas Inlet Connection - 1/2”NPT	25	Air Switch
8	Power Supply Cord - 120V	26	Air Sensing Tube (P1+)
9	Burner Sight Glass	27	Air Sensing Tube (P2-)
10	Indicator Light - Amber (Gas Valve)	28	Manifold Pipe
11	Indicator Light - Red (Air Switch)	29	Manifold Support Bracket/Clamp
12	Tube Flange Connection	30	Terminal Block (24V thermostat)
13	Main Burner	31	Terminal Block (TISS connection)
14		32	Starting Collar
15	Electrode	33	Valve Holder Plate
16	Flame Sensor	34	Fuseholder/Fuse (2 amp)
17	Main Burner Orifice	35	Combustion Air Plate
18	Air Restrictor Plate		

21.0) CLEANING AND MAINTENANCE

⚠ WARNING

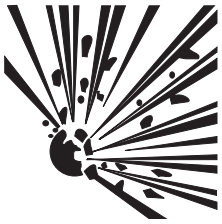

ELECTRIC SHOCK & EXPLOSION HAZARD

Disconnect electrical power and gas supply before servicing.

Failure to do so may result in death or serious injury.

This heater must be cleaned and serviced annually by a qualified contractor before the start of each heating season and at any time excessive accumulation of dust and dirt is observed. Maximum heating efficiency and clean combustion will be maintained by keeping the heater clean.

The contractor shall check the following during periodic maintenance.

- Clearances to combustibles: Check that clearances are being maintained. In poultry applications particularly check that any tri-ply ceiling materials are not sagging on top of the reflectors. In other applications make sure there are no flammable objects, liquids or vapors near the heater. See also Section 4.
- Reflectors: Reflectors should be kept clean, at a minimum blow off the reflectors, preferably wipe them down after every flock. (Dirty reflectors will reduce heat output).
- Heat exchanger tubes: Inspect the heat exchanger tubes to make sure they are not cracked, sagging or showing signs of fatigue. Light corrosion is normal on the weld seam of aluminized tubes.
- Combustion air intake: Disconnect combustion air intake from the burner box and inspect internally using a flashlight to make sure no foreign material has collected in the tubes and that there is no obstruction around the air intake openings. Clean any foreign materials. Inspect any joints to make sure they are completely sealed. See also Section 17.
- Vent materials: Disconnect vent pipe and inspect internally using a flashlight to make sure no foreign material has collected in the pipes. Check the external exhaust hood and make sure that there is no obstruction around the exhaust openings. Clean any foreign materials. Inspect any joints to make sure they are completely sealed. See also Section 16.
- Gas lines: Make sure that the gas lines are not leaking. Check the gas connection to the heater for any signs of damage, fatigue or corrosion. If there are any signs of damage to the gas connection or leaks found in the gas piping, immediately stop using the heater until the gas pipe and connections have been repaired or replaced. Check that the gas lines are not bearing the weight of the heater. See also Section 13.
- Burner Box: In order to extend the longevity of the heater, the heat exchanger tube and the burner must be level. Check that the burner box is level, use the turnbuckle on the burner suspension eyebolt to adjust the level of the burner. See also Section 9.
- Burner sight glass: Check that the burner sight glass is clean and that there glass is sealed against the housing door. If there any signs of distortion the sight glass must be replaced. See section 20 for sight glass location.
- Blower wheel and housing: Check that the blower wheel spins freely, blow out any dust or dirt with compressed air. See section 20 for blower location.
- Electrode condition: Visually check that the electrode gap is maintained at 1/8" and that the tips of the flame sensor and spark electrode are free from deposits. Clean off any deposits. Check that the electrode ceramic is free from cracks. See Section 23.1
- Suspension system: Check that the suspension system is holding the heater level. Make sure that the heater is hanging securely, look for any evidence where the heater may have been hit accidentally and tighten any loose hanging points. Check that S hooks are closed. Check that there is no evidence of wear on the chain and at the ceiling.
- Tube Integrity Safety System: Check that the tension of the tube integrity safety system is maintained at 11". Adjust tension if necessary. See section 12.1
- Main Burner and Orifice: Check the main burner and orifice, remove any dirt or debris including spider webs. See Section 23.1

22.0) TROUBLESHOOTING GUIDE

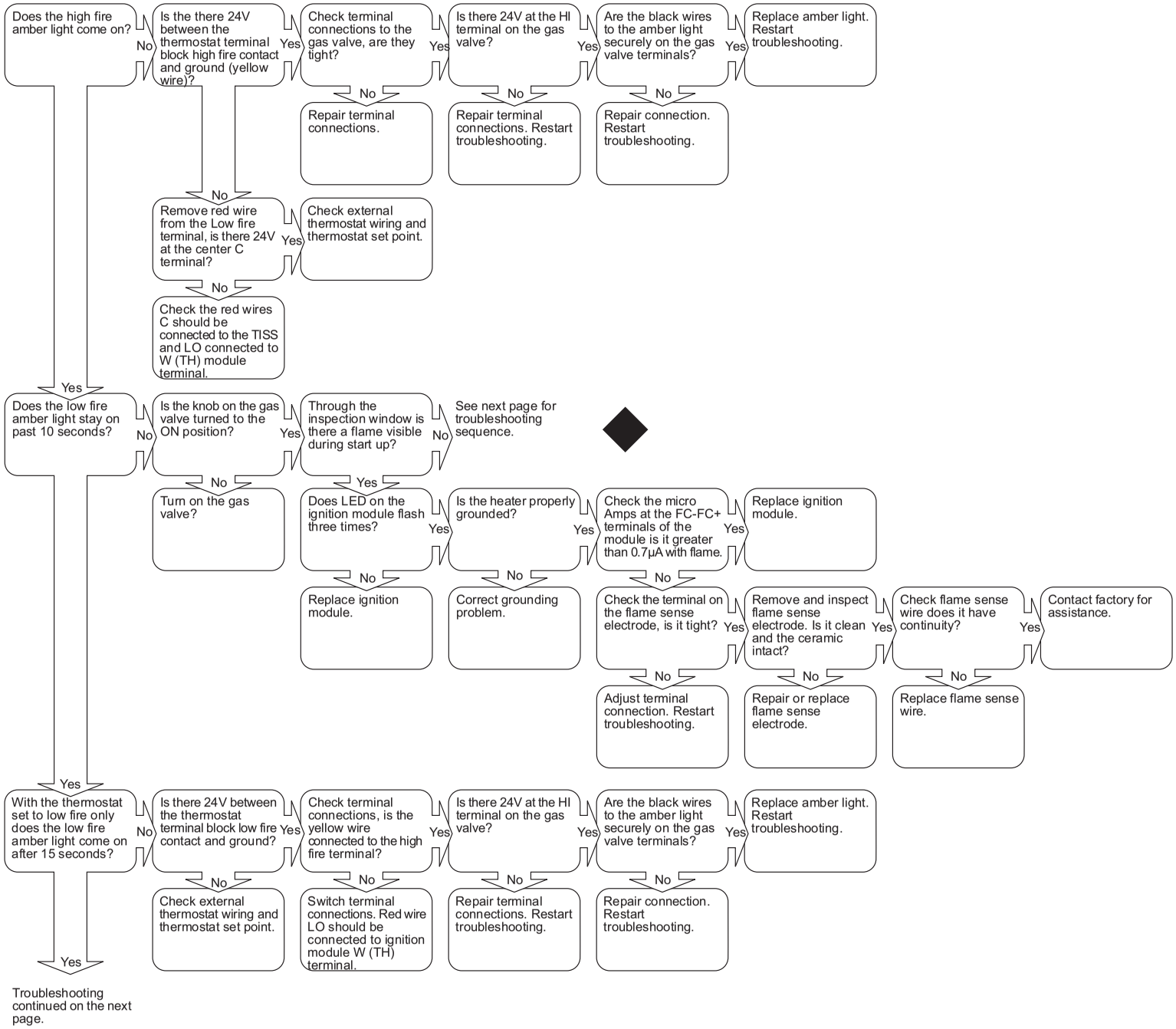
Does the high fire amber light come on?
No
Is the there 24V between the thermostat terminal block high fire contact and ground (yellow wire)?
Yes
Check terminal connections to the gas valve, are they tight?
Yes
Is there 24V at the HI terminal on the gas valve?
Yes
Are the black wires to the amber light securely on the gas valve terminals?
Yes
Replace amber light. Restart troubleshooting.
No
Repair terminal connections.
No
Repair terminal connections. Restart troubleshooting.
No
Repair connection. Restart troubleshooting.
No
Remove red wire from the Low fire terminal, is there 24V at the center C terminal?
Yes
Check external thermostat wiring and thermostat set point.
No
Check the red wires C should be connected to the TISS and LO connected to W (TH) module terminal.
Yes
Does the low fire amber light stay on past 10 seconds?
No
Is the knob on the gas valve turned to the ON position?
Yes
Through the inspection window is there a flame visible during start up?
No
See next page for troubleshooting sequence.
No
Turn on the gas valve?
Yes
Does LED on the ignition module flash three times?
Yes
Is the heater properly grounded?
Yes
Check the micro Amps at the FC-FC+ terminals of the module is it greater than 0.7µA with flame.
Yes
Replace ignition module.
No
Replace ignition module.
No
Correct grounding problem.
No
Check the terminal on the flame sense electrode, is it tight?
Yes
Remove and inspect flame sense electrode. Is it clean and the ceramic intact?
Yes
Check flame sense wire does it have continuity?
Yes
Contact factory for assistance.
No
Adjust terminal connection. Restart troubleshooting.
No
Repair or replace flame sense electrode.
No
Replace flame sense wire.
Yes
With the thermostat set to low fire only does the low fire amber light come on after 15 seconds?
No
Is there 24V between the thermostat terminal block low fire contact and ground?
Yes
Check terminal connections, is the yellow wire connected to the high fire terminal?
Yes
Is there 24V at the HI terminal on the gas valve?
Yes
Are the black wires to the amber light securely on the gas valve terminals?
Yes
Replace amber light. Restart troubleshooting.
No
Check external thermostat wiring and thermostat set point.
No
Switch terminal connections. Red wire LO should be connected to ignition module W (TH) terminal.
No
Repair terminal connections. Restart troubleshooting.
No
Repair connection. Restart troubleshooting.
Yes
Troubleshooting continued on the next page.

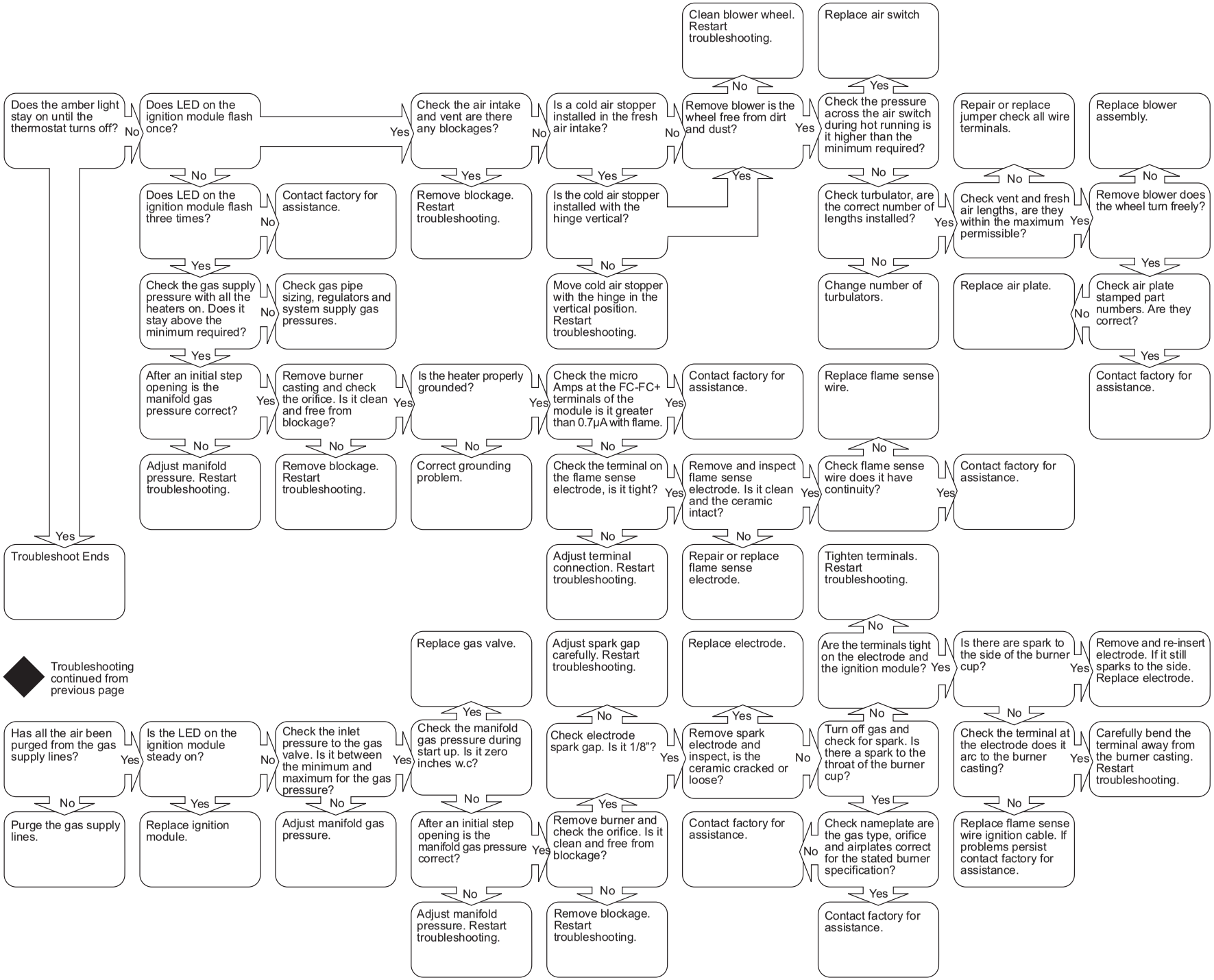
Does the amber light stay on until the thermostat turns off?
No
Yes
Troubleshoot Ends
Does LED on the ignition module flash once?
No
Does LED on the ignition module flash three times?
No
Contact factory for assistance.
Yes
Check the gas supply pressure with all the heaters on. Does it stay above the minimum required?
No
Check gas pipe sizing, regulators and system supply gas pressures.
Yes
After an initial step opening is the manifold gas pressure correct?
No
Adjust manifold pressure. Restart troubleshooting.
Yes
Remove burner casting and check the orifice. Is it clean and free from blockage?
No
Remove blockage. Restart troubleshooting.
Yes
Is the heater properly grounded?
No
Correct grounding problem.
Yes
Check the air intake and vent are there any blockages?
Yes
Remove blockage. Restart troubleshooting.
No
Is a cold air stopper installed in the fresh air intake?
Yes
Is the cold air stopper installed with the hinge vertical?
No
Move cold air stopper with the hinge in the vertical position. Restart troubleshooting.
Yes
Check the micro Amps at the FC-FC+ terminals of the module is it greater than 0.7µA with flame.
Yes
Contact factory for assistance.
No
Check the terminal on the flame sense electrode, is it tight?
No
Adjust terminal connection. Restart troubleshooting.
Yes
Remove and inspect flame sense electrode. Is it clean and the ceramic intact?
No
Repair or replace flame sense electrode.
Yes
Remove blower is the wheel free from dirt and dust?
No
Clean blower wheel. Restart troubleshooting.
Yes
Check the pressure across the air switch during hot running is it higher than the minimum required?
No
Check turbulator, are the correct number of lengths installed?
No
Change number of turbulators.
Yes
Check vent and fresh air lengths, are they within the maximum permissible?
No
Repair or replace jumper check all wire terminals.
Yes
Remove blower does the wheel turn freely?
No
Replace blower assembly.
Yes
Check air plate stamped part numbers. Are they correct?
No
Replace air plate.
Yes
Contact factory for assistance.
Replace air switch
Yes
Check flame sense wire does it have continuity?
No
Replace flame sense wire.
Yes
Contact factory for assistance.
Troubleshooting continued from previous page
Has all the air been purged from the gas supply lines?
No
Purge the gas supply lines.
Yes
Is the LED on the ignition module steady on?
No
Replace ignition module.
Yes
Check the inlet pressure to the gas valve. Is it between the minimum and maximum for the gas pressure?
No
Adjust manifold gas pressure.
Yes
Check the manifold gas pressure during start up. Is it zero inches w.c?
No
After an initial step opening is the manifold gas pressure correct?
No
Adjust manifold pressure. Restart troubleshooting.
Yes
Replace gas valve.
Yes
Check electrode spark gap. Is it 1/8"?
No
Adjust spark gap carefully. Restart troubleshooting.
Yes
Remove burner and check the orifice. Is it clean and free from blockage?
No
Remove blockage. Restart troubleshooting.
Yes
Remove spark electrode and inspect, is the ceramic cracked or loose?
No
Replace electrode.
Yes
Contact factory for assistance.
Are the terminals tight on the electrode and the ignition module?
No
Tighten terminals. Restart troubleshooting.
Yes
Turn off gas and check for spark. Is there a spark to the throat of the burner cup?
No
Check nameplate are the gas type, orifice and airplates correct for the stated burner specification?
No
Contact factory for assistance.
Yes
Is there are spark to the side of the burner cup?
No
Check the terminal at the electrode does it arc to the burner casting?
No
Replace flame sense wire ignition cable. If problems persist contact factory for assistance.
Yes
Carefully bend the terminal away from the burner casting. Restart troubleshooting.
Yes
Remove and re-insert electrode. If it still sparks to the side. Replace electrode.

23.0) REPLACING PARTS

⚠ WARNING

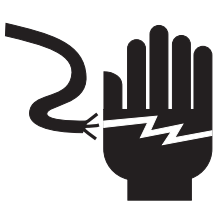

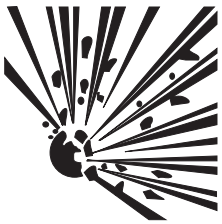

ELECTRIC SHOCK & EXPLOSION HAZARD

Disconnect electrical power and gas supply before servicing.

Failure to do so may result in death or serious injury.

Only use genuine Space-Ray replacement parts. Parts are available from the factory for replacement by a licensed person. Refer to the Replacement Parts Guide in Section 25 for all replacement parts.

23.1) REMOVAL OF MAIN BURNER AND ELECTRODES

The main burner can be inspected without removing the burner housing from the heat exchanger tube.

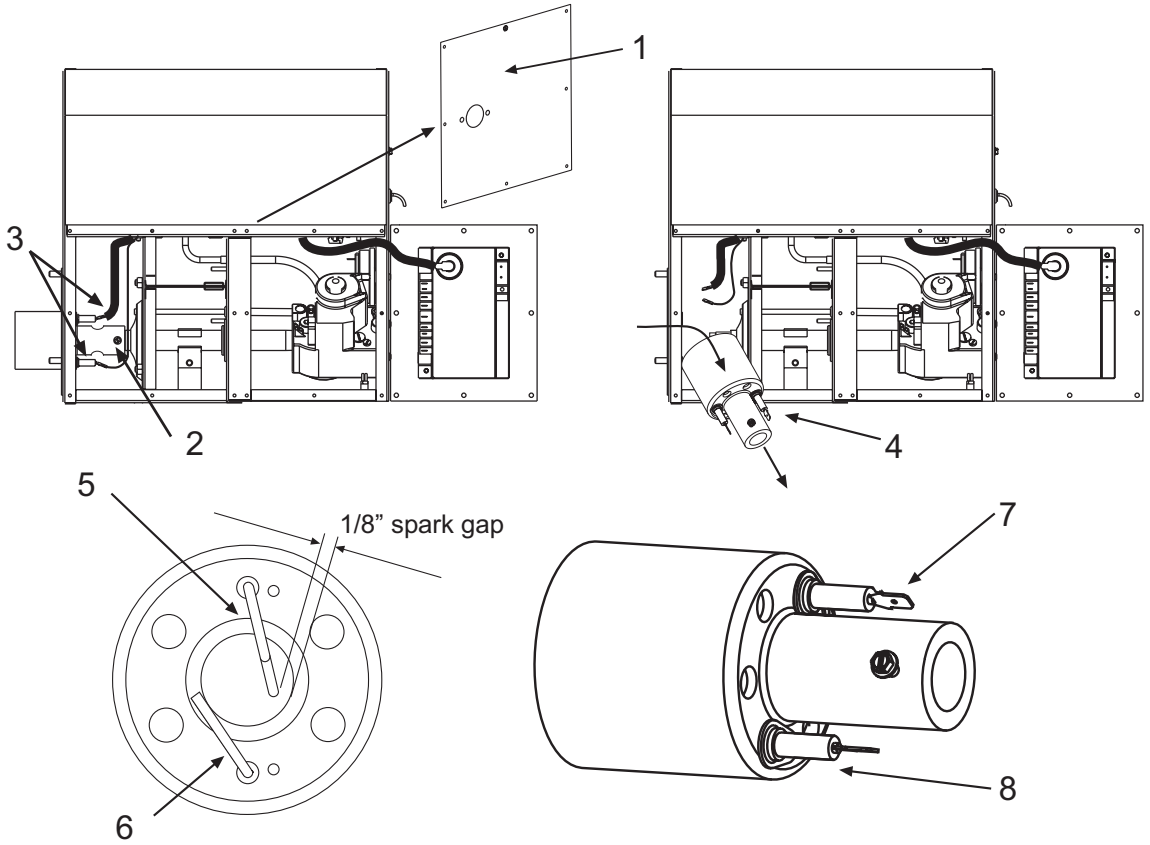

1. Disconnect electrical supply and Remove cover 1.
2. Remove screw securing burner casting to the gas manifold.
3. Disconnect Spark lead and sensing wire.
4. Pull burner forward from the gas manifold and then out through the side of the box as shown.
5. Check the spark gap is 1/8" between the electrode and the burner casting as shown. Spark electrode should be clean and free from debris.
6. Flame sensor should be clean and free from debris.
7. Check ceramic on the spark electrode, for replacement into the box the spark electrode is the ¼" terminal which connects to the spark lead.
8. Check ceramic on flame sense electrode, for replacement into the box the flame sense electrode is the 3/16" terminal which connects to the violet wire. (in some models the terminal is ¼" painted violet)

23.2) REMOVAL OF GAS VALVE AND MANIFOLD ASSEMBLY

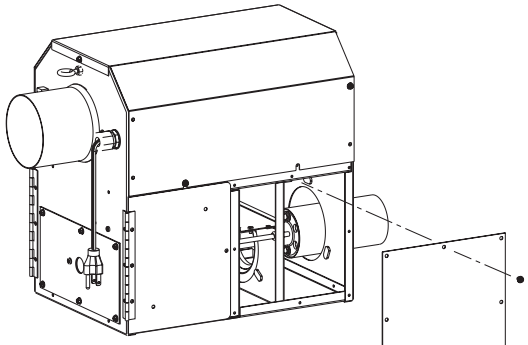

Step 1 Remove side access panel.

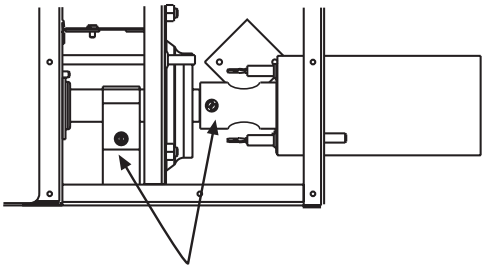

Step 2 Loosen screws from manifold clamp and burner assembly.

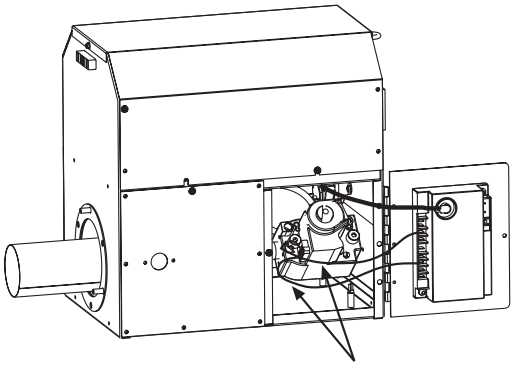

Step 3 Open hinged access panel and disconnect wires from gas valve.

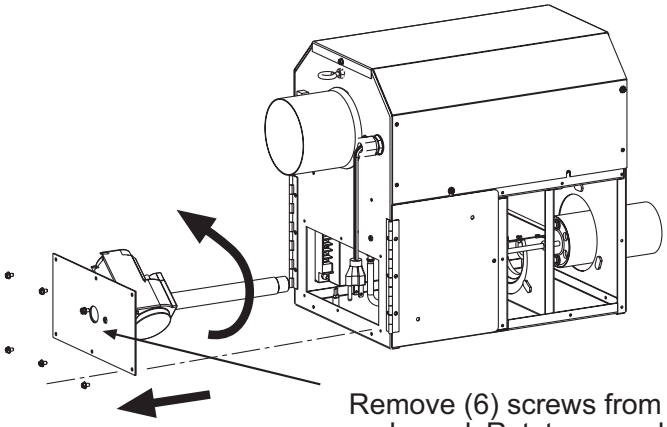

Step 4 Remove (6) screws from end panel. Rotate gas valve and manifold assembly slightly counter-clockwise and slide out from housing.

23.3) AIR SWITCH PRESSURE CHECK

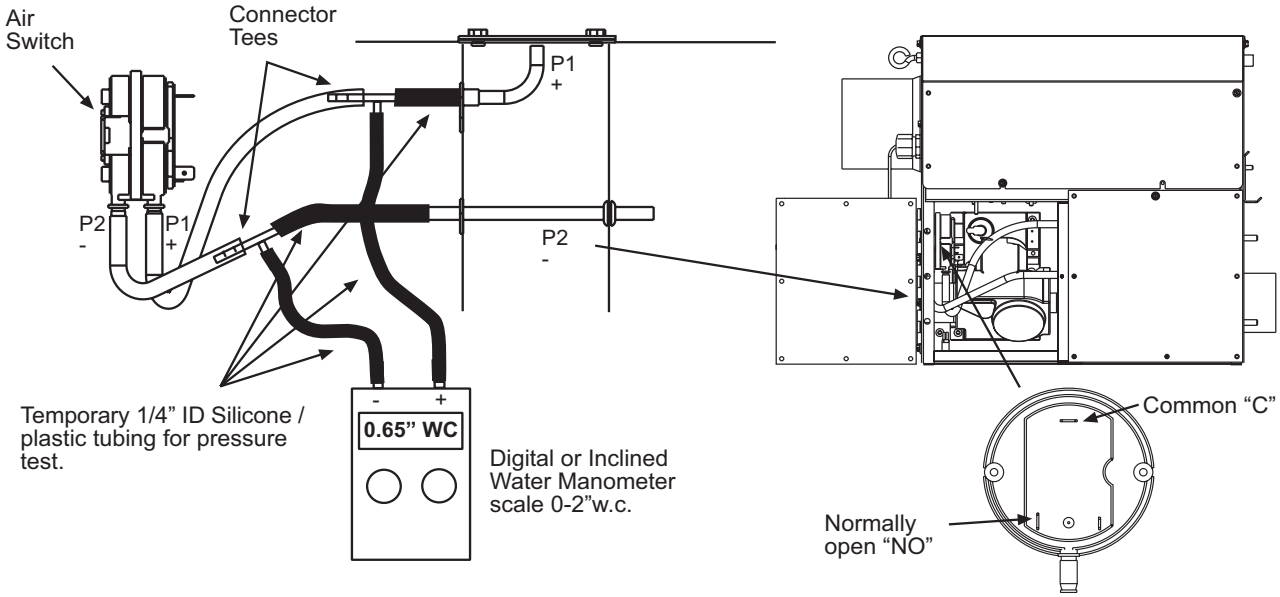

1. Open hinged access panel.
2. Add tubing to connect the air switch tubing P1 + and P2 - with the connector tees and the probes P1+ and P2+.

3. Connect plastic tubing of a digital or inclined water manometer with a 0-2" scale onto the connector tees.
4. Turn heater on and wait until blower motor is activated.
5. Observe air pressure from manometer. This should be higher than the set point indicated below for correct operation.

Model	Operating Pressure
PCS/A 75/50	0.7" W.C. Hot
PCS/A 100/65	0.7" W.C. Hot
PCS/A 125/80	0.39" W.C. Hot
PCS/A 150/100	0.39" W.C. Hot

All pressures are with the heater in operation for at least 15 minutes.

23.4) IGNITION SYSTEM CHECKS

TO CHECK FLAME SENSOR CIRCUIT.

Flame current is the current which passes through the flame from the sensor to ground. The minimum flame current necessary to keep the system from lockout is 0.7 microamps.

a) Turn off heater at thermostat.
b) Connect a meter (dc microammeter scale) in series with the ground lead as shown in the diagram. Connect the meter as follows:
   - Connect the black (negative) meter lead to the electronic control FC- terminal.
   - Connect the red (positive) meter lead to the electronic control FC+ terminal.
c) Restart the system and read the meter. The flame sensor current must be steady and measure at least 0.7 microamps.
d) If the meter reads less than the minimum or if reading is unsteady:
   - Make sure burner flame is capable of providing a good rectification signal.
   - Make sure fasteners securing igniter/sensor are tightened to assure correct positions. DO NOT relocate igniter/sensor.
   - Check for excessive (over 1000°F) temperature at ceramic insulator on flame sensor. Excessive temperature can cause short to ground. DO NOT relocate igniter/sensor.
   - Check for cracked ceramic insulator, which can cause short to ground, and replace sensor if necessary.
   - Make sure that electrical connections are clean and tight. Replace damaged wire.
e) If the meter reads below "0" on the scale, meter leads are reversed. Disconnect power and reconnect meter leads for proper polarity.
f) Remove microammeter. Return system to normal operation.

IGNITION MODULE DIAGNOSTICS

Flame Fault

If at any time the main valve fails to close completely and maintains a flame, the full time flame sense circuit will detect it and energize the combustion blower. Should the main valve later close completely removing the flame signal, the combustion blower will power off following the post purge period.

Fault Conditions

Error Mode	LED Indication
Internal Control Failure	Steady On
Air Flow Fault	1 Flash
Gas valve failure (stuck open)	2 Flashes
Ignition Lockout	3 Flashes

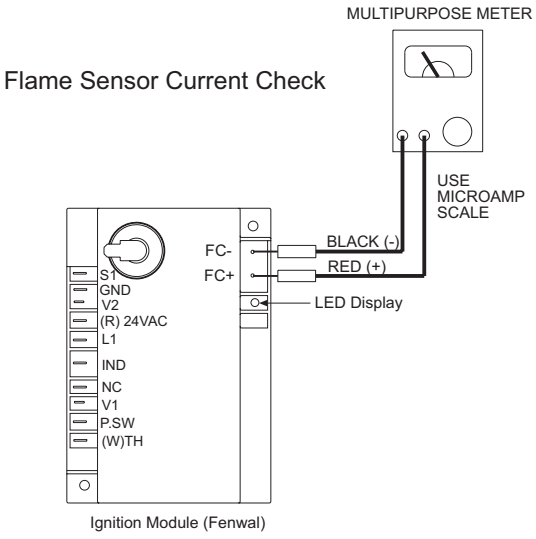

The LED located on the ignition module will flash ON for ¼ second, then OFF for ¼ second during a fault condition. The pause between fault codes is 3 seconds.

24.0) INSTALLATION DATA

Date of Installation: _____ # of Heaters in System: _____

Serial No. _____

Model: **PCS/PCA** _____ – _____ N = Natural Gas L = Propane Gas

25.0) REPLACEMENT PARTS GUIDE – BURNER BOX

Item No.	Part No.	Description	Qty.
		Fasteners	
1	02295040	PHTCS #6-32 x 3/8"	3
1a	02266010	Speed Clip (for air inlet plate)	2
2	02261030	HHTCS #8-32 x 3/8" (green coated)	1
3	02242050	PHTCS #8-32 x 3/8"	5
4	02150200	HHMS #8-32 x 3/4"	2
5	02167010	Locknut 1/4-20 Keps	5
5a	02309000	Eyebolt 1/4-20 x 2”	1
6	02167040	Locknut #8-32 Keps	9
7	02212020	HWHSMS #8 x 1/2" “B” Point (typical all access panels)	45
8	02132020	Rivet 1/8"	14

		Housing Components	
9	44139990	Housing Assembly (welded)	1
9a	44140111	Valve Holder Plate	1
10	44140000	Access Panel (top)	1
11	44140040	Access Panel (hinged)	2
11a	02201070	Hinge 1-1/16” x 6”	2
12	44140058	Access Panel (LH burner end) –with sight glass-	1
13	44140090	Access Panel (RH burner end)	1
14	4414006x	Combustion Air Plate (see size requirements in section 5.0)	1

		Burner Components	
15	42700500	Burner, Investment Casting - Machined	1
16	44146030	Manifold Support Bracket	1
17	44146040	Manifold Support Clamp	1
17a	44146050	Manifold Extension Bracket	1
18	30703000	Blower Assembly	1
19	30632500	Spark Module - Fenwal-24V	1
20	30702010	Flame Sensor	1
21	30702020	Spark Electrode	1
22	30281000	Terminal Block	1
22a	30738030	Terminal Bushing (3 x ¼” tabs)	1
22b	30713000	Fuse Holder	1
22c	30202000	Fuse 1/4 x 1-1/4” (2 amp)	1
22d	30738020	Terminal Bushing (2 x ¼” tabs)	1
23	30279000	Transformer 120v-24V 20VA	1
24	02175020	Strain Relief (ignition cable)	1
25	02175060	Strain Relief (flame sensor wire)	1
26	30514020	Grommet .250ID (air sensing tube)	1
26a	30512020	Split Bushing (misc. wiring, ignition cable, sensor wire)	2
27	30700040	Grommet, Pipe Sealing 1/2"	1
28	42447000	Sight Glass (1-5/8" square plexiglass)	1

Item No.	Part No.	Description	Qty.
29	42744079	Air Sensing Tube Asm. (straight) 1/4"od	1
30	42744069	Air Sensing Tube Asm. (90 deg bend) 1/4"	1
31	30635030	Cord Connector 1/2”	1
32	03988100	Plastic Vacuum Air Tube 10" (P2- to static pressure point)	1
33	03988100	Plastic Vacuum Air Tube 10" (P1+ to total pressure point)	1
34	43563040	Supply Cord -Flat (SPT-1 18/3 x 72" long)	1
35	42709000	Shield, Terminal Block	1
36	42395010	Gasket, Blower	1
37	03946010	Sealing Strip 1/8" x 3/8" wide (access panels) -not shown-	Ft.
38	42752250	Air Inlet Screen	1
38a	30504040	Starting Collar (combustion air inlet)	1
39	30701240	Ignition Cable - Female (2) 1/4" QC x 24"lg -not shown-	1
40	44145060	Manifold Pipe – 6-1/4” lg	1
40a	03333140	Pipe Nipple – 4” lg	1
41	30333250	Gas Valve #VR8205Q-3819 (natural gas)	1
41a	30333260	Gas Valve #VR8205Q-3827 (propane gas)	1
42			
42a			
43	03259xxx	Main Burner Orifice #7/16-27 (see size requirements in section 5.0)	1
44	42741150	Air Restrictor Plate	1
45			
46	42398030	Monitoring Light – Amber (gas valve operation)	2
47	42398150	Monitoring Light – Red (air switch operation)	1
48	30186260	Air Switch (set point @ .65”WC) PCA/PCS75 & 100	1
48a	30186270	Air Switch (set point @ .34”WC) PCA/PCS125 & 150	1

		Tube Integrity Safety Switch (TISS) Components	
65	44175000	Retainer clamp	
66	30519020	Spring	
67	30736000	Thimble	
68	44176010	TISS replacement assembly	

		Labels/Manual	
49	42848000	Label, Nameplate (Space-Ray)	1
50	42013000	Label, Logo (Space-Ray) –not shown-	1
51	43344080	Label, Clearances to Combustibles	1
52	42874030	Label, Wire Connection Diagram	1
53			
54	42875000	Label, Warning (installation/configuration/chemical)	1
55	43269060	Label, 2 stage 24V Thermostat Connection	1
56	43269020	Label, TISS Connection	1
57	43269030	Label, Eyebolt Suspension Warning	1
58	43269040	Label, Gas Valve in “OFF” Position	1
59	43269050	Label, Burner Warning (access panel must remain closed)	1
60	43344110	Label, Flex Gas Connector	1
61	42785020	Label, Ladder Wiring Connection	1
62	42834000	Label, 120V Caution –not shown-	1
63	42922030	Label, Sidewall Venting	1
64	43343510	Installation & Operation Manual –not shown-	1

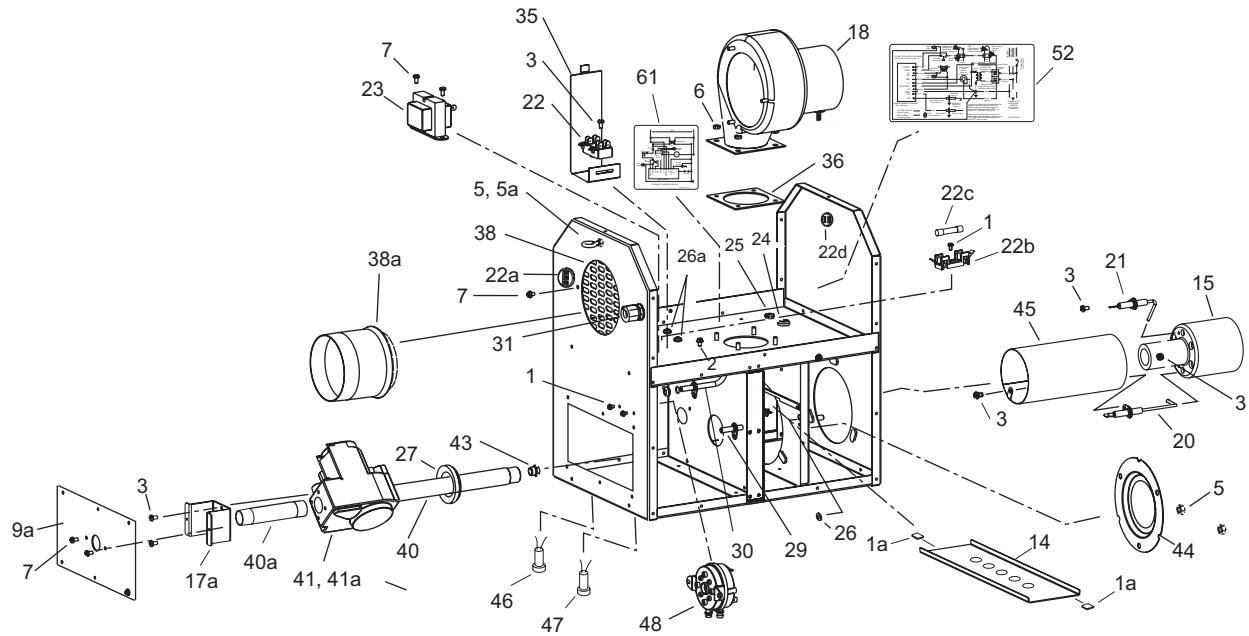
35
3
22
7
23
61
6
18
52
36
5, 5a
38
38a
22a
7
31
26a
25
24
22d
22c
1
22b
3
21
15
45
3
3
20
1
2
43
27
3
9a
7
17a
40a
41, 41a
40
46
47
48
30
29
26
1a
14
1a
5
44

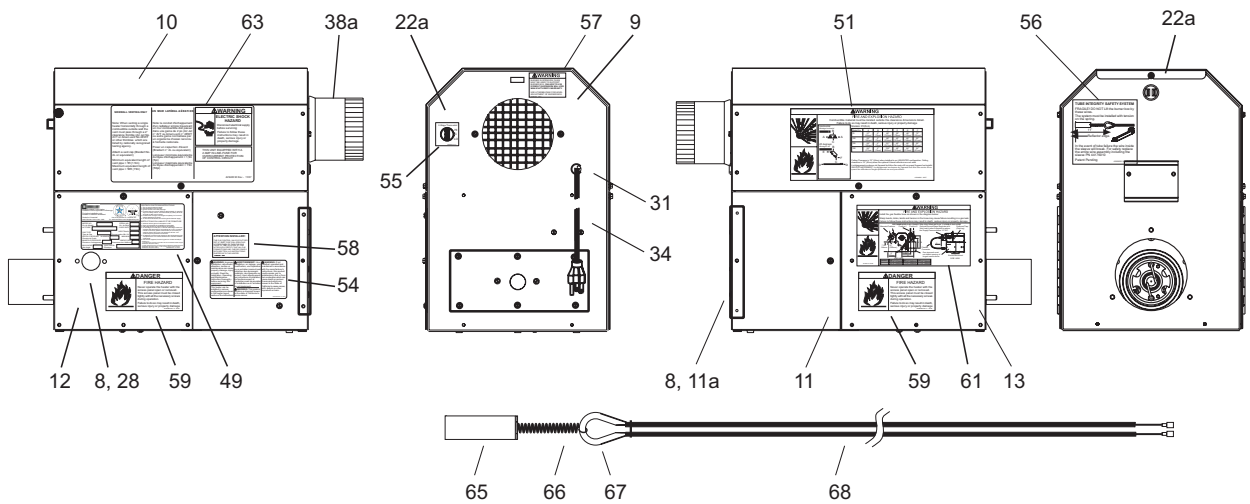
10
63
38a
22a
57
9
51
56
22a
55
31
34
58
54
12
8, 28
59
49
8, 11a
11
59
61
13
65
66
67
68

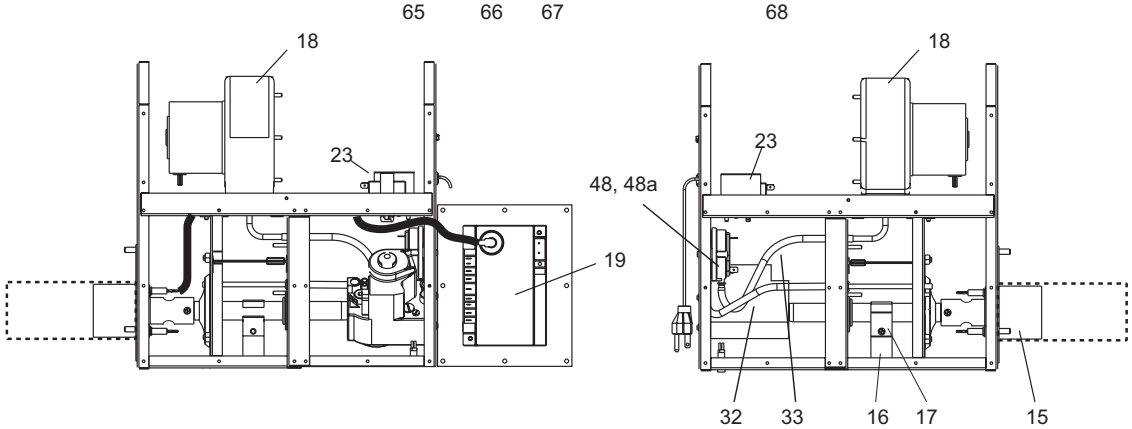
18
23
19
18
23
48, 48a
32
33
16
17
15

BODY COMPONENTS		
ITEM	*PART NO.*	*DESCRIPTION*
1	02266010	Reflector Speed Clip
2	43980010	Wire Hanger
3	42873000	"U" Bolt Clamp, 4" OD Tube
4	02127110	5/16-18 Hex Nut (2 per "U" Bolt)
5	43318000	Tube Support/Hanger Bracket, 13"
6	43319100	Reflector, 9'-11½" long (10' section only; 1 per 10 ft. body section)
7	43320000	End Reflector
8	42921000	Tube Flange Gasket
9*	44028030	10' Tube Assembly Kit, 4" OD, ALC steel with one 24-hole flange **(start tube)**
10	44028100	10' Tube Assembly Kit, 4" OD, HRS steel without flanges **(extension tube)**
11	44028060	10' Tube Assembly Kit, 4" OD, ALC steel without flanges **(extension tube)**
12	02189020	#10 x ½" Self-Drilling Screw
13	30462980	4" OD Tube Compression Coupling w/bolts
14	43208020	4" OD U-Bend *(optional)*
15	43488000	U-Bend Reflector *(optional)*
16	30504500	Flue Adapter Collar
17	44152240	Turbulator (see specifications section 5.0 for quantities)

*** Required on all models for mounting of control box.**

ALC = Calorized, Aluminized Steel
HRS = Hot Rolled Steel

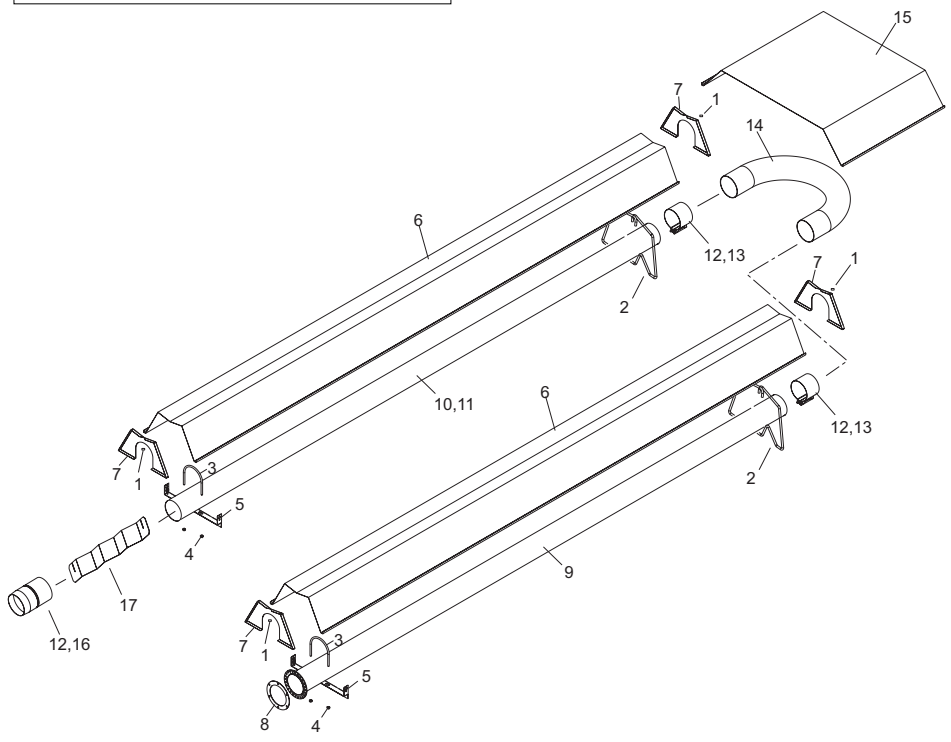

ALL ILLUSTRATIONS ARE INTENDED TO GIVE THE GENERAL IMPRESSION OF UNITS ONLY. OTHER COMBINATIONS OF 5 FT. AND 10 FT. SECTIONS, ARE POSSIBLE. PLEASE CONSULT WITH YOUR Space-Ray SALES REPRESENTATIVE. WE RESERVE THE RIGHT TO ALTER ANY SPECIFICATION WITHOUT NOTICE.

SPACE-RAY
RADIANT GAS BROODERS

GAS-FIRED PRODUCTS LIMITED WARRANTY

LIMITED WARRANTY
Gas-Fired Products, Inc. (GFP), the manufacturer, warrants the original owner of any Space-Ray Poultry Heating Product that it will be free from defects in material or workmanship under normal use and service. The heater(s) shall be installed, used and maintained strictly in accordance with the manufacturer's instructions. The manufacturer's sole obligation under this warranty is limited to furnishing replacement parts, F.O.B. Charlotte, NC, for 12 months from the date of installation, or 18 months from the date of shipment by the manufacturer, whichever period expires first. Labor charges for the removal of defective parts or the installation of replacement parts are not included.

ADDITIONAL WARRANTY ON MODEL SRB40 BROODER EMITTER AND MODEL CTA TUBE HEATER HEAT EXCHANGER: Additionally, the manufacturer will at any time during a 36 month period after installation or 42 months from the date of shipment by the manufacturer, whichever period expires first, furnish at no cost to the original owner, replacement emitter assemblies or heat exchanger tubes which have become inoperative by reason of any defect in our workmanship, materials or construction. The manufacturer will not be responsible for labor charges incurred for removal or installation of emitters. Any transportation charges involved in the return or repair are excluded.

WARNING: Manufacturer's warranty shall not apply: (a) to circumstances where gas pressure to each heater is higher than that specified for each heater; (b) to circumstances where the type of gas is different than the type of gas noted on the name plate for each heater; (c) to water damage to gas controls; and (d) to any heater or component which has been repaired or replaced with other than factory parts, modified in any way, misused or damaged, or which has been used contrary to the manufacturer's written instructions.

LIMITATION OF WARRANTY: THERE ARE NO WARRANTIES, EXPRESS OR IMPLIED, WHICH EXTEND BEYOND THE DESCRIPTION ON THE FACE HEREOF. WITHOUT LIMITING THE FOREGOING, THE MANUFACTURER EXPRESSLY EXCLUDES ANY AND ALL IMPLIED WARRANTIES, INCLUDING BUT NOT LIMITED TO ANY IMPLIED WARRANTY OF FITNESS FOR A PARTICULAR PURPOSE AND ANY IMPLIED WARRANTY OF MERCHANTABILITY FOR ITS PRODUCTS.

If any provision of this warranty is found to be void, unenforceable or unconscionable, then that portion is hereby severed and the remainder of this warranty is hereby saved and shall remain in force.

EXCLUSIVE REMEDY: The sole and exclusive remedy under this warranty is the replacement of the defective parts or brooders as hereinabove specified. THE MANUFACTURER DOES HEREBY EXPRESSLY EXCLUDE ANY AND ALL LIABILITY FOR INCIDENTAL OR CONSEQUENTIAL DAMAGES UNDER THIS OR ANY OTHER WARRANTY. Without intending to limit the aforesaid exclusion, THE MANUFACTURER DOES HEREBY EXCLUDE ANY LIABILITY UNDER THIS OR ANY OTHER WARRANTY FOR INJURIES OR COMMERCIAL LOSSES TO PROPERTY THAT RESULT FROM THE OPERATION, PROPER OR IMPROPER, OF ITS PRODUCTS.

ADDITIONAL TERMS: Manufacturer assumes no liability for delay in performing its obligations under this warranty. Manufacturer assumes no liability for failure in performing its obligations there under if failure results directly or indirectly from any cause beyond its control, including but not limited to acts of God, acts of Government, floods, fires, shortages of materials, strikes and other labor difficulties or delays or failures of transportation facilities.

This is a Non-Residential product. Installation and service shall be by a Licensed Contractor and in accordance with National and Local Codes.

When presenting warranty claims, proof of date of purchase must be submitted.

No Representative is authorized to assume for the manufacturer, any liability except as set forth above.

For the name of your nearest distributor in case of claim under this warranty, contact: Space-Ray Poultry Heating Products / Gas-Fired Products, Inc. / 305 Doggett St., P.O. Box 36485 / Charlotte, NC 28236 / Phone: (704) 372-3485 / Fax: (704) 332-5843 / email: info@spaceray.com.

Manufactured for:
SPACE-RAY
305 Doggett Street · Charlotte, NC 28203-4923
Phone (704) 372-3485 · Fax (704) 332-5843 · info@spaceray.com