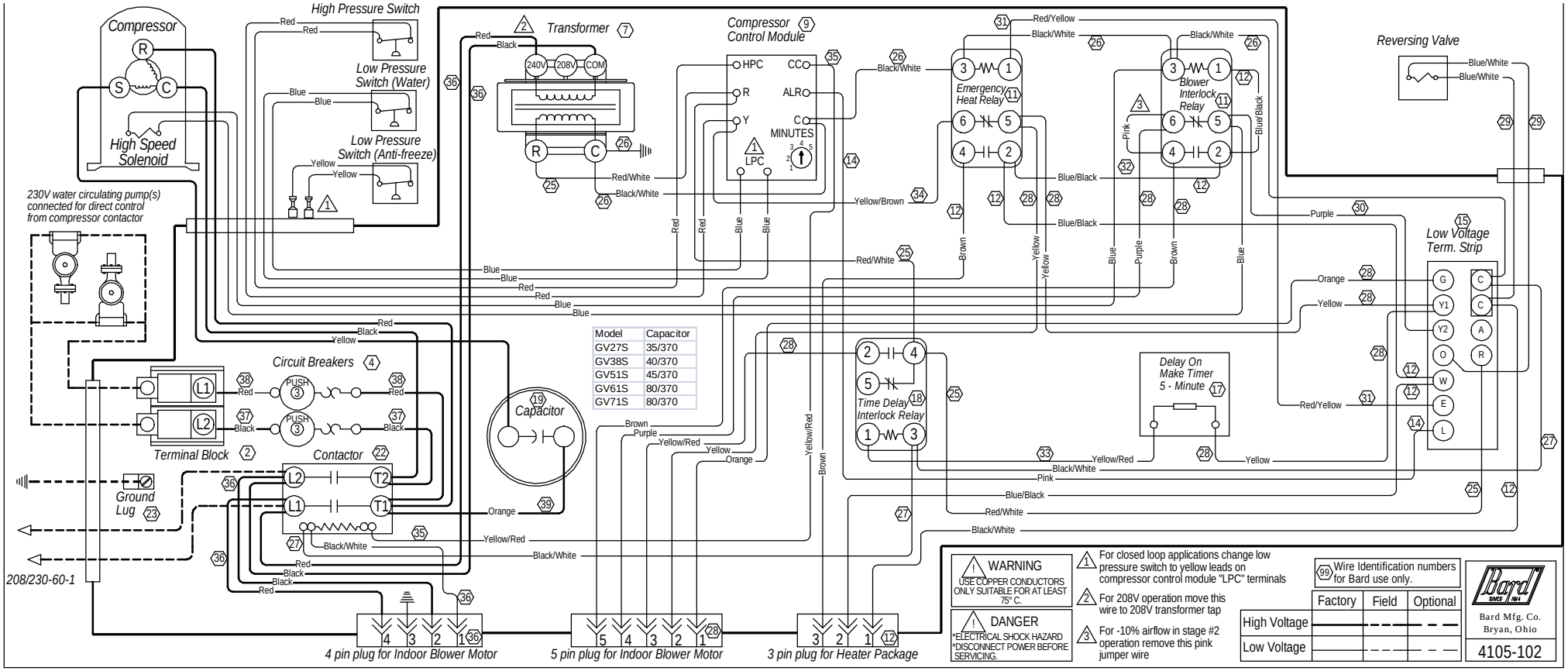

Model	Capacitor
GV27S	35/370
GV38S	40/370
GV51S	45/370
GV61S	80/370
GV71S	80/370

WARNING
USE COPPER CONDUCTORS ONLY SUITABLE FOR AT LEAST 75° C.

DANGER
*ELECTRICAL SHOCK HAZARD
*DISCONNECT POWER BEFORE SERVICING.

1. For closed loop applications change low pressure switch to yellow leads on compressor control module "LPC" terminals
2. For 208V operation move this wire to 208V transformer tap
3. For -10% airflow in stage #2 operation remove this pink jumper wire

99 Wire Identification numbers for Bard use only.

	Factory	Field	Optional
High Voltage			
Low Voltage			

Bard Mfg. Co.
Bryan, Ohio

4105-102