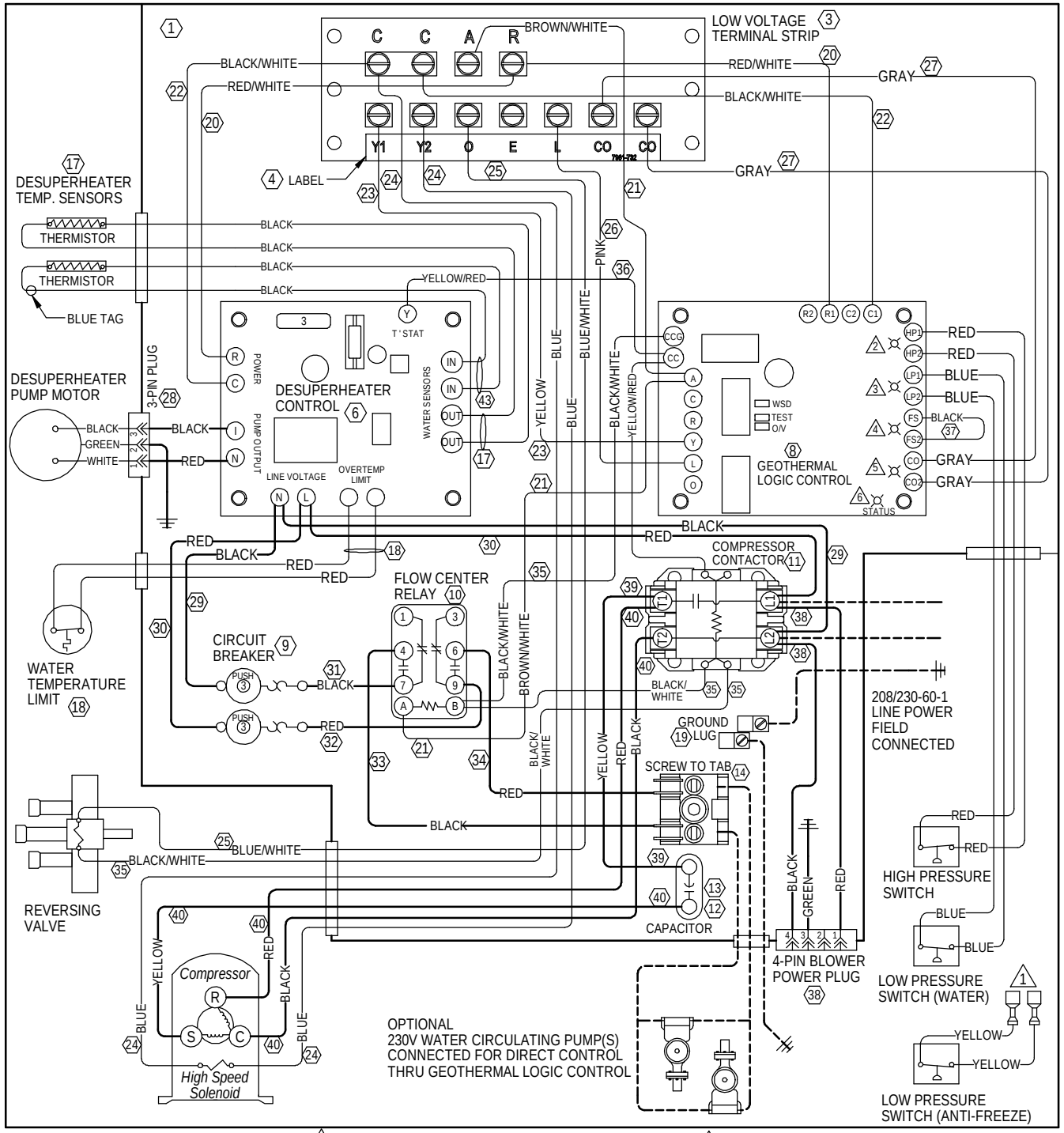

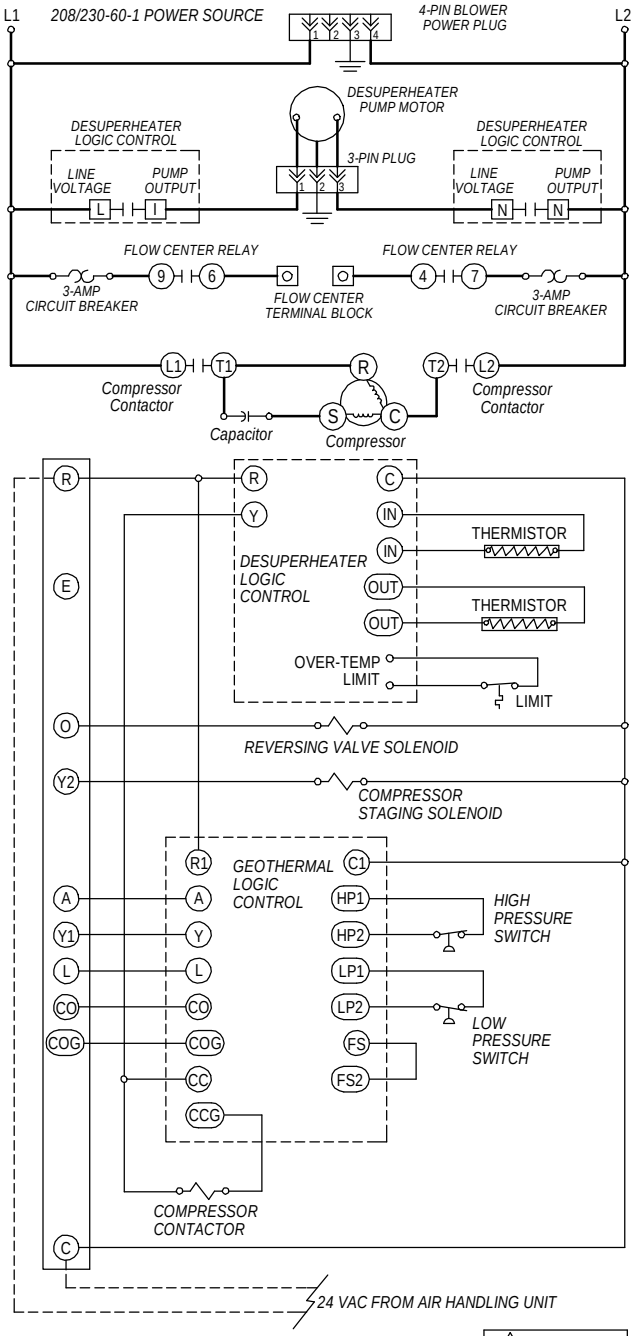

DANGER
*ELECTRICAL SHOCK HAZARD
*DISCONNECT POWER BEFORE SERVICING.

99 Wire Identification numbers for Bard use only.

WARNING
USE COPPER CONDUCTORS ONLY SUITABLE FOR AT LEAST 75° C.

	Factory	Field	Optional
High Voltage			
Low Voltage			

4117-101 A

1 FOR ANTIFREEZE LOOP APPLICATIONS, CHANGE LOW PRESSURE SWITCH TO YELLOW LEADS ON LPC TERMINALS OF GEOTHERMAL LOGIC CONTROL BOARD

2 H.P.S = Green fault light illuminated when fault indicated.

3 L.P.S = Orange fault light illuminated when fault indicated.

4 F.S. = Red fault light illumninated when fault indicated.

5 COND. = Yellow fault light illuminated when fault indicated.

6 Status = Green Status LED will blink in normal operation. At lock out status LED is ON.